Journal of Sound and Vibration (1973) 28(3), 587–617

ROTATING BLADES AND AERODYNAMIC SOUND†

C. L. MORFEY
Institute of Sound and Vibration Research,
University of Southampton, Southampton SO9 5NH, England

(*Received* 1 *March* 1973)

The history of research on rotating blade noise is reviewed, from early studies of propeller radiation to current work on aircraft-engine fans. The survey is selective, with emphasis on fundamental aspects of aerodynamic sound generation by blades. The topics covered include the following: early research on propeller noise, unsteady airfoil theory, acoustic radiation and cut-off, aerodynamic sound generation, scattering by airfoils at arbitrary chord/wavelength ratios, boundary layer and vortex shedding noise from airfoils, broad-band noise due to incident turbulence, high-order rotational noise from isolated rotors, rotor/tip-vortex interaction, interaction between moving blade rows, sound transmission through blade rows, the instantaneous Kutta condition, supersonic rotor noise, in-duct measurement techniques, and centrifugal flow machines.

I. HISTORICAL BACKGROUND AND EARLY DEVELOPMENTS

1. INTRODUCTION

The study of sound generated aerodynamically, in particular by rotating blades, has been closely linked with the development of aviation. Much of the research on turbomachinery noise in the last ten years has been aimed at making jet aircraft more nearly acceptable to the people who live around airports. It began with the recognition [1, Lloyd 1959] that the early jet airliners were 10 to 20 dB noisier on landing approach than their turbo-propeller equivalents; landing noise levels, due mainly to compressor noise, were in fact comparable with take-off levels due to jet noise.

Nevertheless, it is worth remembering that the first research into the noise of aircraft dates back to the end of the First World War, when the Advisory Committee for Aeronautics—over which Lord Rayleigh had presided for the last ten years of his life—produced a series of reports on the sound radiated from aircraft propellers. The present review starts at this point, and surveys the advances in research which have contributed to our current understanding of rotating machinery noise.

2. EARLY RESEARCH ON PROPELLER NOISE

The earliest attempt to formulate a theory of propeller radiation appears to be that of Lynam and Webb [2, 1919], who recognized—following a suggestion by Lanchester‡—that the rotation of the propeller blades would cause both a periodic modulation of the flow through the disk, and a corresponding acoustic disturbance at large distances. Lynam and

† This review was written at the Max-Planck-Institut für Strömungsforschung, Göttingen, while the author was on leave from the Institute of Sound and Vibration Research, University of Southampton, during the period September 1972–February 1973.

‡ See Appendix.

Webb modelled the action of the blades by a continuous ring of stationary sources and another ring of sinks, with an arbitrary axial displacement; an alternative approach was tried by Bryan [3, 1920], who sought a solution for the sound field of a point source in circular motion. Bryan's paper is interesting as an early, though unsuccessful, example of the retarded-time approach.

Neither of these papers predicted the absolute amplitude of the radiated sound, and it was left for Gutin [4, 1936] to show that within the framework of linear acoustics, the steady aerodynamic forces on the propeller blades could be represented by a source distribution of dipole order in the propeller disk. The extension to include blade thickness was first made by Deming [5, 1937; 6, 1938] and was completed by Gutin [7, 1942], who pointed out the connection between thickness noise and blade section area.

The experimental study of propeller noise was delayed by inadequate instrumentation, after a promising start at the time of the First World War. An early Aeronautical Research Committee report [8, 1920] noted that propellers make considerably less noise in flight than when tested on the ground, and gave comparative noise ratings for 2-, 3- and 8-bladed propellers rotating at different speeds on a test stand. At about the same time, Waetzmann [9, 1921] had been collecting observations on model propellers as well as aircraft in flight, and noticed the sensitivity of propeller noise to nearby obstructions or asymmetries in the flow. Similar observations on model propellers were made by Prandtl [10, 1921], and are worth quoting in part for their historical interest.

> "An electrically-driven propeller was run first in the large room [of the AVA, Göttingen] and then in the wind tunnel. The main difference between the two arrangements in terms of the flow was that in the first case . . . the propeller immediately reingested part of its own vortex system. In the second case, the propeller drove the air slowly round the closed tunnel circuit . . . so that the slipstream had been smoothed out by the time it arrived back at the propeller.
>
> The first arrangement gave precisely the results described by Waetzmann. The propeller tone was always clearly noticeable, although distinctly impure . . . . On the other hand with the second arrangement the siren tone was conspicuously absent, provided there was no disturbance in the inflow or outflow. But if any kind of obstruction was held in the flow entering the propeller, for example a small strip of wood, the siren tone became clearly apparent straight away, this time with musical purity . . . .
>
> The common explanation of all these phenomena is that the pressure variations which cause the siren tone arise when the propeller blade passes a region of strongly varying velocity. Thus the conditions for sound radiation are met when the blade cuts through a vortex . . . .
>
> The fact that the siren tone was always present with the propeller in the room is a consequence of reingestion, by the propeller, of vortices from its own slipstream. Since these vortices have no fixed location . . . and since each vortex in passing through the plane of the propeller gives rise to only a small number of impulses, the tone is noticeably impure."

The rediscovery of these phenomena is described in section 9.

The development of microphones and electronic signal processing in the 1930's made it possible to go beyond simple observations of this type, and do quantitative experiments. The first reliable measurements of propeller rotational noise were made by Stowell and Deming [11, 1935], Obata *et al.* [12, 1936] and Ernsthausen [13, 1936], just before Gutin's theory appeared. Stowell and Deming used a frequency-band analyser, and were able to identify the characteristic directional patterns of the blade-passing harmonics and the broadband "vortex noise"; their propeller was mounted in the open on a rotatable test stand, well clear of aerodynamic obstructions. The other authors found similar results, and

Ernsthausen made the further observation that when a radial obstruction was placed close to the propeller, a new directional peak in the blade-passing noise appeared on the propeller axis.

Comparisons between measurements and theory were later made by Deming for both blade thickness noise [6, 1938] and noise due to torque and thrust [14, 1940]. In both cases, far-field measurements were made on a 2-bladed propeller at tip Mach numbers from 0·5 to 0·8. Measured and calculated sound pressure levels differed by typically 3 dB for the first four blade-passing harmonics.

A large number of experiments carried out in Berlin were summarized by Ernsthausen [15, 1941] and compared with a theory based on blade thrust and thickness. Ernsthausen's theory is unsatisfactory in that a harmonic spectrum envelope was assumed, rather than deduced from the chordwise distributions of blade thickness and loading. At the blade-passing frequency, however, reasonable agreement with the zero-torque theory was found for 2- and 4-bladed model propellers up to tip Mach numbers of 0·9.

At slightly supersonic tip speeds ($1{\cdot}0 < M_{tip} < 1{\cdot}3$), Ernsthausen's predictions were around 10 dB low, which may have been due to neglect of torque noise since the corresponding directional patterns show a peak in the propeller plane. Support for this view comes from tests on a supersonic 2-bladed propeller by Hubbard and Lassiter [16, 1952], whose results for the first two blade-passing harmonics agreed well with Gutin's theory (based on thrust and torque) up to $M_{tip} = 1{\cdot}3$.

Thus as far as stationary propellers were concerned, it appeared that the theories of Gutin and Deming were able to estimate the low-order harmonics of propeller noise with acceptable accuracy for tip Mach numbers ranging from 0·5 up to at least 1·0, and zero forward speed. The question of higher rotational harmonics (qB values above about 8) seems not to have been explored, although Waetzmann [9, 1921] had earlier detected harmonics up to $qB = 40$. The inadequacy of the Gutin model in this region was not recognized until some years later (see section 9).

Theoretical predictions of propeller noise in steady forward flight were first given by Billing and Merbt [17, 1946; 18, 1949] who considered the propeller blades to have finite section area† and lift, but neglected the radiation from the force component in the drag direction (normal to the relative velocity). Billing and Merbt started from a basic solution due to Küssner [19, 1944]‡ for two types of point source in spiral motion, corresponding to singularities of velocity potential and pressure. Later, Garrick and Watkins [20, 1954] generalized Gutin's original analysis for thrust and torque forces by allowing for uniform translation of Gutin's equivalent dipole distribution.

The form of all these results is somewhat complicated since they are related to the propeller location at the time the sound is heard, rather than when the sound was emitted. An alternative treatment of forward flight effects has been given by Morfey [21, 1972] in which the sound field is related to the source location at the time of emission.

Finally, it should be pointed out that the theories of propeller radiation described above make no attempt to include terms non-linear in the blade thickness and loading. Significant non-linear effects on the sound field are inevitable once the flow becomes supersonic over an appreciable area of the blades (see section 14), and may occur even at high subsonic speeds.

A partial correction for non-linear thickness effects was proposed by Arnoldi [22, 1956], who suggested using the actual surface pressure distribution (specifically, the average of the upper and lower surface values) to derive an equivalent thickness distribution in place of the

† In Billing and Merbt's thickness noise expression, the product of blade chord and thickness should be interpreted as the section area.

‡ Küssner's paper contains an interesting reference to unpublished work on propeller noise theory by Prandtl in 1935.

geometric thickness of the blade section. However, a limited comparison with near-field pressure measurements for a propeller in flight [23, 1956] showed best agreement with the simple linear model based on section area, the discrepancy being 3 dB or less under sonic tip conditions. In view of the complexity that a proper non-linear theory would involve, perhaps it is just as well that linearization appears not to introduce serious errors over the subsonic speed range.

3. UNSTEADY AIRFOIL THEORY

Despite its success in predicting low-order harmonic radiation, the model of propeller radiation described in section 2 was incomplete, as might have been realized from the early experimental observations. In practice, the sound radiated by subsonically rotating blades extends to much higher frequencies than would be predicted on the basis of steady aerodynamic loading and blade thickness. The high-frequency sound (relative to the rotational frequency) is accounted for largely by *unsteady* blade forces; in particular, at low Mach numbers and large wavelength/chord ratios, the sound field is determined by the unsteady blade loading per unit span.

Theoretical methods of estimating aerodynamic lift in unsteady incompressible flow had been developed for flutter and gust loading calculations well before any acoustic application was envisaged. As a result the linearized theory, valid for thin lightly-cambered airfoils at small angles of attack, is now largely complete; it has provided a number of predictions useful for acoustics, often in closed analytical form. The historical development of the key results is sketched in the following paragraphs.

3.1. UNSTEADY LIFT ON SINGLE AIRFOILS (TWO-DIMENSIONAL)

Küssner [24, 1936] developed a method of calculating the instantaneous lift distribution on a two-dimensional airfoil, due to a two-dimensional unsteady upwash field superimposed on the mean flow. In the same paper he used the method to find the "unit response function" for the lift due to a step change in upwash velocity embedded in the flow (Küssner's function). Schwarz [25, 1940] simplified Küssner's method and proved a simple integral relation between the chordwise distributions of lift and upwash, which was applied by Küssner [26, 1940] to an airfoil passing through a "frozen" sinusoidal upwash field.

Meanwhile Kármán and Sears [27, 1938] had demonstrated a general relation, valid for harmonic upwash velocities with any chordwise distribution, between the total instantaneous lift and the quasi-steady circulation. The latter is defined as the circulation round the airfoil which would occur in *steady* flow, corresponding to the instantaneous upwash over the chord. The Kármán–Sears relation was applied by Sears [28, 1941] to the sinusoidal frozen-gust problem, giving the same result for unsteady lift as Küssner's calculation [26, 1940]. The frequency response function for the lift (Sears' function) is mathematically related to Küssner's unit response function, as might be expected; Garrick [29, 1938] has given a general discussion of such relationships in airfoil theory. Useful analytical approximations for Küssner's function and Sears' function have been given by Sears and Sparks [30, 1941] and Liepmann [31, 1952], respectively.

An important generalization of Sears' function was obtained by Kemp [32, 1952], who allowed the upwash distribution to have an arbitrary complex wavenumber in the chordwise direction. Kemp's result allowed Kemp and Sears [33, 1953] to calculate the unsteady lift on an airfoil placed in the near field of a moving cascade.

Despite the wide use made of these theoretical results, few direct experimental checks are available. The data collected by Acum [34, 1963] for low reduced frequencies ($\nu \lesssim 1$) show

differences of order 10–20% between measured and predicted values of overall lift and moment; considerably larger discrepancies are indicated for the local pressure distribution towards the trailing edge. This suggests a breakdown of the instantaneous Kutta condition normally introduced to account for boundary layer effects at the trailing edge in what is otherwise an inviscid model.

3.2. UNSTEADY LIFT ON BLADES IN CASCADE (TWO-DIMENSIONAL)

The unsteady lift response of an array of blades is more complicated to calculate. Following earlier restricted calculations by Lilley [35, 1952] and Sisto [36, 1955], a numerical method valid for any unloaded flat-plate cascade subjected to a harmonic upwash was formulated by Whitehead [37, 1962]. Whitehead's method allows for any chordwise distribution of time-harmonic upwash, as long as the same distribution is applied to each blade; a constant phase shift between adjacent blades is permitted. The harmonic lift response is tabulated for various upwash fields, including a frozen convected pattern which leads to the cascade equivalent of Sears' function.

Comparison of the single-airfoil Sears function with the cascade version calculated by Whitehead shows that when the gap between adjacent blades is large compared with the upwash wavelength along the blade, the cascade effect is small and single-airfoil theory is a valid approximation.

3.3. RECENT DEVELOPMENTS

The calculation of unsteady lift on single airfoils has been extended recently in two directions, to cover (i) lifting airfoils and (ii) spanwise variations in the upwash field.

The influence of mean lift and camber has been considered in two papers by Horlock [38, 39, 1968]†; to first order, these have no effect on the unsteady lift due to *upwash* velocity components (normal to the chord). On the other hand, they allow *chordwise* velocity perturbations to generate unsteady lift. Horlock's results are limited to a frozen pattern convected with the flow; a more general derivation of the mean-lift effect, valid for any chordwise-velocity field, has been given by Morfey [40, 1970].

A generalized version of the Sears function, which permits the upwash pattern to vary sinusoidally in the spanwise direction, is needed for calculating the unsteady lift on a blade as it passes through turbulence. Analytical approximations to the lift response have been found by Filotas [41, 1969] and Mugridge [42, 1971], in terms of the reduced frequency ν and non-dimensional spanwise wavenumber $k_y l$. More accurate values were obtained by Graham [43, 1970] using a numerical method. It appears that Mugridge's expression for the lift amplitude is a good approximation at low reduced frequencies, such that $\nu^2 + (k_y l/2)^2 \ll 10$, while Filotas's approximation is better at higher frequencies. The effect of increasing $k_y l$ is to reduce the amplitude of the lift per unit span (l denotes the blade chord).

On the other hand the effect of finite $k_y l$ on the lift response to *chordwise* velocity perturbations is zero for an uncambered airfoil, because the incident velocity field does not affect the bound vortex distribution to first order.

As far as sound radiation is concerned, the incompressible two-dimensional-airfoil model is useful in the range $2l < \lambda < h$, where h is the blade span. A rough guide to the modified Sears function (assuming $k_y l < 1$‡) is obtained by replacing ν^2 with $\nu^2 + (k_y l/2)^2$. For sound wavelengths greater than the blade span, however, it is more important to know the total integrated lift on the blade with due allowance for end effects; the estimates given by Filotas [44, 1971] may be used for this purpose.

† For a unified derivation, see Naumann and Yeh [180, 1973].
‡ If $k_y > k$, there is no sound radiation according to the two-dimensional model.

II. RADIATION MODELS AND SOURCE MECHANISMS

4. ACOUSTIC RADIATION AND CUT-OFF

A multi-bladed subsonic rotor in a uniform flow is a basically inefficient radiator of sound; the larger the number of blades, the more closely the rotor approximates to a two-dimensional disturbance pattern with subsonic phase speed. From this point of view, unsteady blade forces—caused, for example, by wakes from upstream—are important because they contribute disturbances with supersonic phase speeds.

The generation of supersonically rotating disturbances is illustrated by the stator–rotor interaction mechanism, which Prindle [45, 1961] and Tyler and Sofrin [46, 1962] identified as an important source of blade-passing noise in aircraft-engine compressors. When a subsonic rotor operates in the disturbed velocity field of a stationary blade row, unsteady forces are set up on the rotor blades. If the stationary row consists of V equally-spaced identical vanes, it was shown by Tyler and Sofrin that the force field at blade-passing frequency contains components which rotate at $B/(B - sV)$ times the rotor speed, where s is any integer, positive or negative. Thus if V is close to the blade number B, part of the force field can rotate supersonically even when the rotor speed is well below sonic.

The significance of supersonic rotation was demonstrated by Embleton and Thiessen [47, 1962], who calculated the sound power radiated into a free field by a ring source and showed how the power fell off sharply as the source phase speed was reduced below the speed of sound. This corresponds to the cut-off effect in an infinite axisymmetric duct, where the sound power vanishes for subsonic phase speeds at the outer duct wall.

The link between the free-field and duct cut-off effects has been discussed by Morfey [48, 49, 1964] and later in more detail by Morfey [50, 1969] and Lowson [51, 1970]. Reference [49] contains an early demonstration of cut-off in an axial-flow compressor.

Most subsequent calculations of sound radiation from rotors and rotor–stator combinations have been based either on a free-field model, following Embleton and Thiessen, or a uniform-duct model, following Tyler and Sofrin. The former is more obviously appropriate for open rotors and propellers, and the latter for ducted-flow machines. However, the difference in terms of radiated sound power is likely to be small for sound wavelengths less than the rotor diameter. This point is further discussed in a paper by Wright [52, 1972].

4.1. FREE-FIELD RADIATION MODELS

Lowson [53, 1965] obtained a solution for the free-field radiation from point sources in accelerated motion, and has used it to construct free-field models of sound radiation from helicopter rotors and compressor blade rows (see sections 9 and 11). Lowson's solution has also been used by Morfey and Tanna [54, 1971] to draw some general conclusions about the effect of rotation on the sound field of a point force.

On the other hand it is simpler for many purposes to start from a fixed-coordinate description of the source distribution, as was done for propeller noise by Gutin; this approach has been used by Wright [55, 1969; 56, 1971] in order to generalize Gutin's analysis to periodic blade forces. A solution for the far-field spectrum of a point multipole in circular motion was derived on similar lines by Ffowcs Williams and Hawkings [57, 1969], and provides a check on the approximate spectral results of Morfey and Tanna.

4.2. DUCT RADIATION MODELS

Ducted-source models for sound radiation from blade rows have been developed by Morfey [48, 1964; 58, 1971; 59, 1972] and Mani [60, 1970]. In these analyses the sound field

within the duct is expressed as a sum of modes, which are supposed to be excited independently by the source.

In fact most duct terminations introduce some degree of coupling between the modes, as illustrated by the calculations of Vainshtein [61, 1949] and Lansing [62, 1969]. However, modes which are excited well above their cut-off frequency are radiated from an open end with virtually no reflection back up the duct, and the coupling with other modes is correspondingly small.

The sound field radiated from an open-ended duct may be estimated from the expressions given by Tyler and Sofrin [46, 1962] and Morfey [50, 1969], for baffled circular and annular openings respectively; these relate the sound field to the distribution of normal velocity over the opening, and zero mean flow is assumed. Lansing [62, 1969] has given similar results for a single mode arriving at the end of a semi-infinite unflanged pipe; his comparisons suggest that the presence or absence of a flange is not important for estimating the main beam radiated by a mode well above cut-off.

A description of some other recent work on duct radiation is included in the review by Doak in this issue of aerodynamic noise theory and flow duct acoustics.

5. AERODYNAMIC SOUND GENERATION

Most of the recent progress in understanding the sound produced by blades in airflows has been based on the acoustic analogy proposed by Lighthill [63, 1952]. In the acoustic analogy, the pressure p (or density ρ) is formally regarded as a small-amplitude sound field, driven in a uniform fluid at rest. Sources of sound are formally identified with non-zero values of the quantity $q = (1/c_0^2)\partial^2 p/\partial t^2 - \nabla^2 p$, where c_0 is the sound speed in the analogous fluid.

Primitive versions of the acoustic analogy were given earlier by Rayleigh [64, 1878] and Lamb [65, 1932]. In Chapter 15 of his book, Rayleigh showed that the scattering of incident sound by small local variations in density and compressibility could be described by secondary sources, whose strength was zero outside the region of altered fluid properties. Lamb further showed that a fluctuating point force applied to a fluid at rest would act as a dipole source of pressure fluctuations; this was the starting point of Gutin's propeller noise theory.

Whereas Rayleigh and Lamb restricted their analyses to small disturbances, the essential step later taken by Lighthill was to incorporate the non-linear terms which describe sound generation by turbulence. This was accomplished by evaluating q, the equivalent source distribution, from the general equations of fluid motion.

5.1. SURFACE SCATTERING DUE TO SOLID BOUNDARIES

Curle [66, 1955] subsequently extended Lighthill's analogy by pointing out that fixed boundaries in the flow could be replaced in the analogy by surface force distributions. Curle's theory leads to an analogous sound field in an *unbounded* fluid, which is unnecessarily restrictive and does not allow, for example, for duct boundaries in the acoustic radiation model. The situation was clarified by the later work of Ffowcs Williams and Hawkings [67, 1969], who generalized the analogous source distribution of Lighthill to include the effect of boundaries, without prescribing any acoustic boundary conditions.

Meanwhile Doak [68, 1960] had shown that any rigid surface in the flow could be formally treated as a rigid acoustic scatterer for the volume source radiation, provided $\partial p/\partial n$ was zero at the boundary. This condition is met at any rigid surface, apart from a viscous term proportional to μc^{-2}. The rigid-boundary analogy offers some advantage over Curle's free-field analogy when it is required to estimate the sound radiation at wavelengths short compared with the surface dimensions. Thus it has been used by Ffowcs Williams and Hall [69,

1970] and Crighton and Leppington [70, 1971] to show how a semi-infinite rigid plane, or more generally a wedge, alters the sound output of quadrupole sources in the vicinity of the edge.

The main difficulty in applying the free-field acoustic analogy to large surfaces is that the source distribution which replaces the boundary surfaces is coupled to its own pressure field. Nevertheless it has been successfully used, in some simple cases, to calculate the surface scattering from blades whose dimensions are comparable with the sound wavelength (see section 6).

An approximate version of Ffowcs Williams and Hawkings's analogy was developed by Morfey [59, 1972] to represent sound generation by blades of thin airfoil section. The blades were modelled by continuous distributions of force and displacement, so that the resulting source terms in the wave equation included scattering by the blade surfaces. The main new result was that in inhomogeneous flows, the surface scattering is determined by the blade loading per unit density. Thus if a thin lifting airfoil travels through a region of variable density, the scattered sound pressure is zero to order $1/c_0$.

5.2. VOLUME SCATTERING DUE TO LOCAL PRESSURE FIELDS

The volume source distribution q in an inviscid flow, which was approximated by Lighthill [63, 1952] as the double divergence of $\rho_0 v_i v_j$, may be expressed, following Chu and Kovasznay [71, 1958], as a series of second-order terms involving the pressure, entropy and vorticity modes. The pressure–entropy product terms, which Lighthill neglected in his $\rho_0 v_i v_j$ approximation, correspond to the equivalent sources introduced by Rayleigh to describe thermal scattering. The other second-order source terms which involve the pressure are the pressure–pressure and pressure–vorticity interactions. The last two were recognized as possible sources of subsonic rotor noise by Ffowcs Williams and Hawkings [57, 1969], and the additional contribution of the pressure–entropy source terms has been discussed by Morfey [59, 72, 1972].

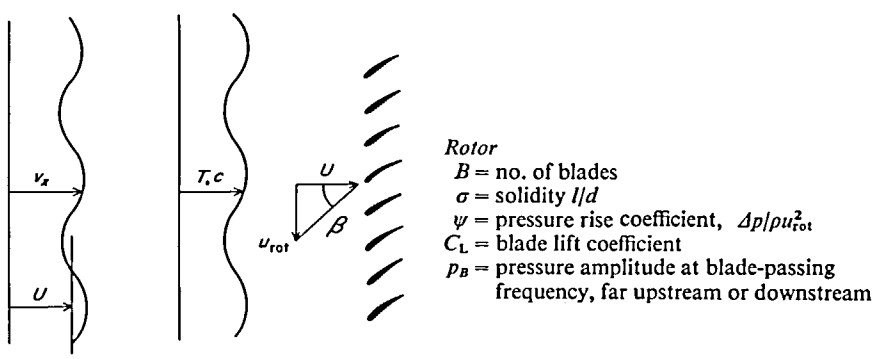

$$v_x - U = v_k \cos k\theta, \quad c - c_0 = c_k \cos k\theta; \quad |1 - k/B| < M_{rot}$$

$$p_B/(\rho u_{rot} v_k) \doteq \sqrt{\sigma \sin\beta}\,|1 - (C_L/\pi)\cot\beta| \qquad (1)$$
$$p_B/(\rho u_{rot} v_k) \doteq \psi M_{rot} \qquad (2)a$$
$$p_B/(\rho u_{rot} c_k) \doteq \psi \cot\beta . |1 - k/B| \qquad (2)b$$

Figure 1. Scattering of velocity and temperature wakes by a two-dimensional rotor. Mechanism (1): Surface scattering by rotor blades (i.e., radiation due to lift fluctuations) [59]. Mechanism (2): Volume scattering by the blade-to-blade potential field associated with steady lift forces [72, 73]. (a) Velocity wake; (b) temperature wake (perfect gas approximation). The common range of validity for the estimates is confined to low Mach numbers, rotor solidities in the range 0·1 to 0·6, and inlet flow angles β from approximately 20° to 70°.

All these mechanisms may be regarded as scattering processes. In the case of rotating blades, the non-uniform pressure field carried round with the rotor scatters incident disturbances—whether in the form of entropy, pressure or vorticity perturbations—and sound is radiated. The rotor pressure field itself is largely non-propagating at subsonic speeds; but because the scattering process is non-linear, supersonically rotating components can arise from the interaction of the two fields.

When a rotor operates in a circumferentially distorted velocity field, both surface and volume scattering contribute to the sound radiation. In order to compare the contributions, the volume scattering mechanism has been evaluated by Morfey [73, 1971] for the two-dimensional model shown in Figure 1, with the wavelength of the incident velocity distortion equal to the blade spacing. Because of an extra Mach number factor in the radiated pressure (due to the quadrupole form of the source distribution), the volume scattering is negligible at low Mach numbers compared with the surface scattering due to unsteady blade forces.

On the other hand, if the temperature is circumferentially non-uniform as well as the velocity, the surface and volume scattering contributions vary in the same way with Mach number. Approximate expressions for the radiated sound are listed in Figure 1.

5.3. COMPARISONS WITH EXPERIMENT

Comparisons between measured and predicted sound radiation from blades are available only for simple cases in which the sound field can be related to unsteady blade forces. A direct test of Curle's free-field relation was made by Clark and Ribner [74, 1969], who cross-correlated the lift and sound pressure produced by an airfoil in a jet. Heller and Widnall [75, 1970] made separate measurements of the fluctuating force spectrum and the radiated sound spectrum produced by a flow spoiler inside a pipe. In neither case was there any significant discrepancy. Finally, Lipstein and Mani [76, 1970] and Smith [77, 1971] measured the downstream radiation at blade-passing frequency from rotors with circumferentially distorted inlet flows. Their results showed good agreement with the fluctuating-force theory; a more detailed discussion is given in reference [59].

6. SCATTERING BY AIRFOILS AT ARBITRARY CHORD/WAVELENGTH RATIOS

Explicit solutions for scattering by airfoils, with no restriction on the chord/wavelength ratio, have so far been obtained only for a highly simplified model which represents each airfoil by a rigid flat plate parallel to the undisturbed flow. The scattering of incident disturbances is then treated as a linear perturbation problem, which is solved in one of two ways: either the plate is represented by a dipole layer (the free-field analogy), or the plate boundary conditions are matched directly to a set of known outgoing-wave solutions.

The first approach has been used successfully for an infinite cascade of plates, and the second for scattering by a single plate; details are given below under the two respective headings.

6.1. FREE-FIELD ANALOGY

The free-field acoustic analogy is particularly useful for modelling surfaces whose dimensions are small, so that an incident sound wave suffers negligible scattering. In the case of airfoil-section blades, this condition is met if the sound wavelength is large compared with the blade chord. Then the dipole distribution which represents the blades can be estimated without knowing the sound field in advance.

On the other hand, for wavelengths comparable with the chord or less, the dipole distribution must be calculated along with the sound field. This may be done either numerically, with

the boundary conditions satisfied at a finite number of points on the blades, or analytically by means of the Wiener–Hopf technique.

The direct numerical approach has been developed by Kaji and Okazaki [78, 1970], Whitehead [79, 1970] and Smith [77, 1971] to describe scattering by a two-dimensional cascade of flat plates. Kaji and Okazaki restricted their solution to incident sound waves, while Whitehead and Smith included vorticity waves and blade vibration as additional input disturbances. The detailed methods of solution differ somewhat, that of Smith being particularly straightforward and rapid.

The Wiener–Hopf technique has been used by Koch [80, 1971] to solve the sound transmission problem attacked numerically by Kaji and Okazaki. Results were obtained in series form and require numerical evaluation; it is doubtful whether the method offers any practical advantage over Smith's iterative solution.

6.2. DIRECT MATCHING OF BOUNDARY CONDITIONS

The scattering of sound from a single two-dimensional flat plate can conveniently be described in terms of elliptic coordinates; the plate surface corresponds to a constant value of one of the coordinates. If the incident disturbance produces a given normal velocity over the rigid surface, the scattered sound field is obtained as the outgoing radiation from an equal and opposite surface velocity. Adamczyk and Brand [81, 1972] have used this approach to calculate the scattering of three-dimensional sound waves by a two-dimensional airfoil in subsonic flow.

III. RESEARCH ON PARTICULAR ASPECTS OF BLADE NOISE

7. BOUNDARY LAYER AND VORTEX SHEDDING NOISE FROM AIRFOILS

At an early stage in propeller noise research, it was noticed that propeller blades radiated noise of a broadband character which could easily be distinguished from the blade-passing tones—see, for example, Waetzmann [9, 1921] and Stowell and Deming [11, 1935]. The first attempt to correlate this type of noise with aerodynamic parameters was made by Yudin [82, 1944], who carried out experiments on the noise of rotating cylindrical rods. Yudin explained his results in terms of vortex shedding, which caused fluctuating forces and hence sound radiation.

The concept of vortex shedding from a bluff cylinder was subsequently applied to helicopter rotor blades by Goddard and Stuckey [83, 1964] and Davidson and Hargest [84, 1965], in an attempt to correlate the "broadband" rotor noise with aerodynamic operating conditions. However, narrow-band analyses of helicopter rotor spectra—Figure 2 shows an early example from a report by Leverton [85, 1967]—have cast doubt on these early correlations. It appears that much of the energy formerly taken as broadband may not be broadband at all, except under very smooth flow conditions. The broadband "floor level" obtained in smooth flow has been studied by Leverton in some detail [86, 1972], and is discussed further below.

A physical picture somewhat different from Yudin's was put forward by Powell [87, 1959] and Lilley [88, 1961], who associated the sound radiation from *unstalled* airfoils with the turbulent boundary layers leaving the trailing edge. Lilley's ideas were used as a basis for various experimental correlations of axial fan noise, including those of Sharland [89, 1964] and Morfey and Dawson [90, 1966]. Sharland's experiments clearly showed the large effect produced by stalling the fan blades, with increases in broadband noise level of over 10 dB in the lower-frequency part of the spectrum.

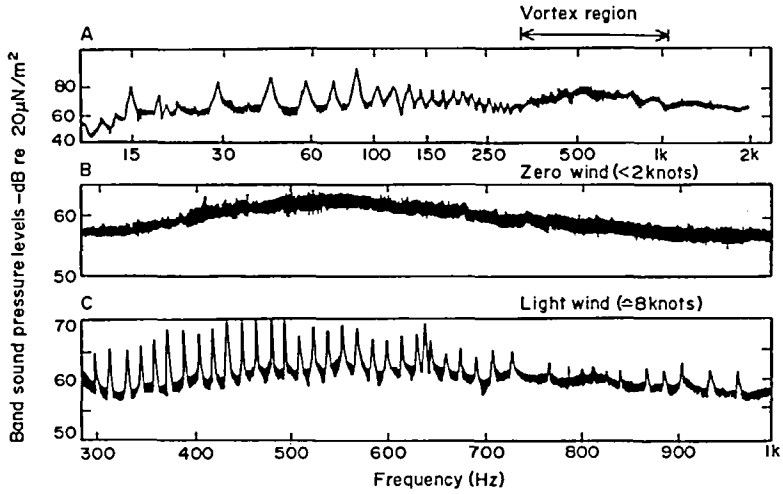

Figure 2. Narrow bandwidth analyses of helicopter far-field noise—hovering Wessex. A: Typical 1·5% bandwidth analysis. B: 0·5 Hz bandwidth analysis of "vortex region"; still conditions. C: As B, but light wind.

In view of the different mechanisms involved, the radiation of sound from stalled and unstalled airfoils is discussed separately below. Factors not considered are the effect of Reynolds number—except through its influence on the unstalled drag coefficient—and incident turbulence, which is taken up in the next section.

7.1. STALLED AIRFOILS

Figure 3 shows a fully-stalled airfoil at angle of attack α. The flow separates from both leading and trailing edges, leaving a wake of approximate thickness $\delta = l\sin\alpha$; outside the wake the mean velocity is V.

For sound wavelengths large compared with the airfoil, the radiation is determined by the fluctuating normal force N; the chordwise force is assumed to be negligible at high Reynolds numbers. A series of careful experiments by Gordon [91, 1968; 92, 1969] corresponds closely to this situation. Gordon measured the sound power spectrum radiated by a flat strip spoiler, mounted inside a pipe at various angles of attack; from the measurements, the normal force spectrum can be inferred up to the pipe cut-off frequency.

In non-dimensional terms, the results show a flat power spectrum for the normal force coefficient ($C_N = N/\frac{1}{2}\rho l h V^2$) in proportional bands, up to about $f\delta/V = 0{\cdot}2$; the experimental data extend down to $f\delta/V = 0{\cdot}02$. The r.m.s. force coefficient $\tilde{C}_N$ in a 1/3 octave band was approximately 0·01 over this frequency range, for Reynolds numbers (based on V and δ) from 4×10^4 to 5×10^5 and Mach numbers from 0·2 to 0·9.

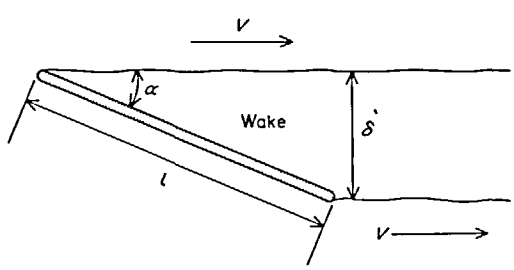

Figure 3. Definition sketch for stalled airfoil.

The spectrum shape described above is consistent with Sharland's stalled-rotor noise spectrum. It is interesting, moreover, that a 1/3 octave $\tilde{C}_N$ value between 0·01 and 0·02 was estimated for axial-flow compressor blades by Bragg and Bridge [93, 1964], and may in fact be inferred, rather indirectly, from Whitehead's analysis of compressor blade vibration spectra measured under stalled conditions [94, 1962].

Spoilers of two different widths were used by Gordon, having aspect ratios (h/l) of 1·6 and 3·6, and showed no significant differences in $\tilde{C}_N$. However, extrapolation to higher aspect ratios would be unrealistic since the force fluctuations cannot be expected to remain in phase over the whole span. Lack of spanwise correlation would eventually cause $\tilde{C}_N$ to fall off as $\sqrt{l_s/h}$, where l_s (assumed non-zero) is the spanwise integral length scale for the force per unit span. Thus if l_s were inversely proportional to frequency, the radiated sound intensity in proportional bands would vary as f at high aspect ratios (e.g., for helicopter blades) rather than f^2 as observed by Gordon.

It is interesting that acoustic spectra with this frequency dependence have been observed by Leverton [86, 1972] on a hovering helicopter rotor at high thrust settings. The low-frequency behaviour predicted above extended to the point where the sound wavelength was roughly twice the blade chord; while at higher frequencies, the spectrum slope changed over to an $f^{-2\cdot5}$ or f^{-3} variation in proportional bands. The high-frequency fall-off agrees well with Sharland's data on a stalled fan rotor, but too little is known of the radiation mechanism to attempt a theoretical explanation. The only theoretical work which offers any guidance on stalled-airfoil radiation at high frequencies is that of Crighton [95, 1972], which deals with the radiation properties of semi-infinite vortex sheets.

7.2. UNSTALLED AIRFOILS

An unstalled airfoil in a smooth flow will experience unsteady forces due to its own turbulent boundary layer. In the absence of edge effects, the r.m.s. fluctuating wall pressure under a flat-plate boundary layer is only about twice the mean wall shear stress, while the fluctuating shear stresses are smaller still, about 20 dB below the pressure fluctuations. However, much higher pressure levels have been measured on actual airfoils, probably because of the finite streamwise extent of the surface. An interesting discussion of the possible mechanisms involved was given by Kelly [96, 1969], who argued that the effect should depend at a given frequency on the ratio l/λ, where λ is the acoustic wavelength.

Some evidence for such a dependence is provided by Mugridge's airfoil pressure data, where the spectra fall off rapidly for wavelengths less than $2l$ [97, 1971]. Mugridge measured the surface pressure near the trailing edge over a range of flow conditions, and found spectrum levels in the low-frequency region ($\lambda > 2l$) which were consistently about 20 dB higher than corresponding tunnel-wall measurements. For this comparison the data were normalized on the boundary layer displacement thickness, which was shown by Schloemer [98, 1968] to produce a reasonable collapse of wall pressure spectra under moderate streamwise pressure gradients.

A model for the sound radiation from turbulent boundary layer/trailing edge interaction was proposed by Mugridge [99, 1971] in which the unsteady blade force was estimated from the wall pressure measurements of Bull [100, 1963] and Schloemer, and an empirical factor added to account for the higher pressure levels found in the airfoil experiments above. The resulting expression for the sound power spectrum (equation (17) of reference [99]) implies overall power levels some 10 dB lower than Sharland's vortex-shedding formula (equation (9) of reference [89]).

The sound power spectrum thus predicted has been checked by Mugridge [99, 1971] against measurements of the broadband sound radiated from two different axial fan rotors. Reasonable agreement was found for non-dimensional frequencies fl/V between 0·2 and

$0{\cdot}5/M$; outside these limits the model breaks down, as Mugridge and Morfey have indicated [101, 1972]. The other restrictions on the model were satisfied since both rotors had blade aspect ratios greater than 2, and were run at Mach numbers below 0·5.

Despite this agreement, it must be admitted that little is known of the unsteady flow mechanisms responsible for the fluctuating lift in the first place. At high frequencies ($\lambda < 2l$) the situation is even worse, since no experimental correlation of boundary layer/trailing edge noise is available for this end of the spectrum. However, some guidance is offered by acoustic theory in the limit of large l/λ, where diffraction by the trailing edge may be expected to dominate the radiation pattern. By exploiting the quadrupole nature of the acoustic source distribution, Ffowcs Williams and Hall [69, 1970] were able to find the directivity and the dependence on c_0 for the acoustic radiation from turbulence near the edge of a rigid half plane. Their results may be applied to airfoil trailing-edge radiation provided $M \ll 1$ and the wavelength is small enough;† under these conditions the far-field sound pressure varies as $c_0^{-1/2}$ (compared with c_0^{-1} for large wavelengths), and has a directional factor $(\sin\theta)^{1/2}\sin\frac{1}{2}\phi$ in the spherical polar system of Figure 4 (compared with $\sin\theta\sin\phi$ for large wavelengths).

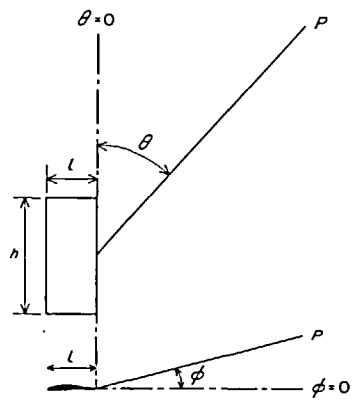

Figure 4. Polar coordinate system for describing edge scattering directivity.

It is important to note that the general statements above do not depend on the detailed nature of the quadrupole source distribution. In particular, the question of whether the flow over the trailing edge should satisfy some kind of Kutta condition has no bearing on the c_0 dependence and directivity of the far-field pressure, any more than it does in the large-wavelength limit. This point is illustrated by the example calculated by Jones [102, 1972].

7.3. BROADBAND NOISE ASSOCIATED WITH BLADE TIPS

During tests on a model axial fan rotor, Lowson *et al.* [103, 1972] observed a high-frequency hump in the broadband noise spectrum which they attributed to the tip region of the rotor blades. A similar phenomenon had been observed earlier on a model helicopter rotor by Leverton, who has since confirmed it on a full-scale test rig [86, 1972].

The full-scale tests of Leverton showed the hump extending over roughly an octave in frequency, with the centre frequency given approximately by $fl/V_{tip} = 10$ for tip Mach numbers from 0·4 to 0·7‡. Changes in rotor thrust setting at constant speed had no significant effect on either the frequency or level of the hump. On the other hand the peak 1/3 octave intensity varied with tip speed approximately as V^5.

† That is, small compared with l and h, but not small compared with the boundary layer thickness.
‡ The model tests of Lowson *et al.* gave about twice this frequency at $M_{tip} \sim 0{\cdot}1$.

Because the corresponding chord/wavelength ratio is so high, the V^5 dependence is to be expected as a consequence of the diffraction argument above. However, the mechanism responsible for the velocity fluctuations at this frequency remains unclear (*cf.* [103]).

8. BROADBAND NOISE DUE TO INCIDENT TURBULENCE

Two similar bodies, placed in an otherwise smooth flow, generate sound most effectively when one lies in the turbulent wake of the other. The first person to record this effect appears to have been G. I. Taylor [104, 1924], who waved a toasting fork through the air and noticed a louder singing noise when the plane of the prongs lay in the direction of motion than when it was perpendicular to the motion. Taylor's toasting fork would have had a Reynolds number of around 1000 based on prong diameter, so each prong would tend to shed a regular vortex-street which accounts for the "singing".

A later experiment by Kramer [105, 1953] ingeniously demonstrated the Taylor effect for airfoil sections by rotating a single blade of high aspect ratio at zero angle of attack, so that the blade passed directly through its own wake. The overall noise level on the axis of rotation was about 3 dB higher with this arrangement than when the blade was given a 1 degree angle of attack in either direction. Significantly, it was not affected by boundary-layer suction over the outer part of the blade. A similar phenomenon was observed by Hubbard and Maglieri [106, 1960] using a helicopter rotor; the sound radiated in a given 1/3 octave band passed through a minimum as the rotor pitch angle was increased from zero, which was most pronounced at the high-frequency end of the spectrum.

A criticism of these results is that they are incapable of discriminating between broadband noise and rotational harmonics. However, Leverton has observed the same behaviour on a model rotor somewhat similar to Kramer's, as well as on a full-scale helicopter rotor [86, 1972]; narrow-band analysis was used in each case to exclude any contribution from rotational noise. The initial drop in broadband spectrum level with increasing blade pitch was less pronounced in the full-scale tests (no more than about 3 dB at all frequencies), possibly as a result of the 8 degree blade twist.

The tentative conclusion is that rotors which operate at very low flow coefficients, in an otherwise smooth flow, generate broadband noise mainly by the passage of blades through their own turbulent wakes.

A rather different situation is presented by most axial fan rotors, which operate in a duct at relatively high flow coefficients. Here the blade wakes are swept downstream clear of the rotor, and cannot encounter the blades a second time unless the exhaust flow recirculates to the fan inlet. On the other hand turbulence may be ingested from upstream blades or struts, and also from the duct-wall boundary layer.

Despite an early attempt by Sharland [89, 1964] to separate the broadband sources in a model fan and relate them to the incident turbulence intensity, no adequate comparison of measurements with theory has yet been given. The prediction of incident-turbulence noise from blades amounts at low frequencies to finding the unsteady lift response, whose relation to the incident velocity field has been discussed in section 3. Knowledge of the turbulence intensity is not sufficient for this purpose, and what is needed is information on both the frequency spectrum of the incident velocity fluctuations, and their spatial coherence in the rotor plane at each frequency.

Lack of such information has not prevented the formulation of scaling laws for broadband fan noise, based on similarity estimates of the unknown quantities. Following the initial work of Sharland, Smith and House [107, 1967] used this approach to correlate a series of noise measurements on multi-stage axial compressors. In these machines, all rotors beyond the first were subjected to turbulent flow from upstream stages, and it appeared reasonable

to attribute the noise mainly to incident turbulence. Subsequently, Snow [108, 1970] and Morfey [109, 1970] examined similar data,† and observed that over the Mach number range 0·3 to 0·8, the broadband sound power spectrum was related more closely to the rotor chord/wavelength ratio l/λ than to the Strouhal number fl/V. The spectrum peak in proportional bands occurred at a value of l/λ around 1, and its absolute value was found to vary as $C_D^2 V^5$ for rotor Mach numbers up to 0·6; the typical rotor drag coefficient C_D for each machine was deduced from overall-efficiency measurements.

The V^5 relationship is in fact what would be expected at high l/λ values for the scattering of turbulence by either the leading or trailing edges of the blades; thus although the agreement is encouraging, it does not enable one to tell whether the measured noise was due to turbulence arriving from upstream or to turbulence generated directly on the blades. In fact it is almost impossible to interpret such measurements without detailed information on the turbulent flow entering each blade row, which has not been included in any data published so far.

Finally, it is worth pointing out the somewhat arbitrary nature of the distinction between tone and broadband radiation for a rotor in unsteady flow. If the inlet velocity fluctuations contain low-frequency components (compared with the blade-passing frequency) the radiation spectrum will exhibit a series of finite-bandwidth peaks, whereas higher-frequency broadband turbulence tends to produce a more uniform spectrum. This effect has been demonstrated theoretically by Mani [110, 1971]; experimental evidence of tone radiation due to low-frequency turbulence is discussed in the section which follows.

9. HIGH-ORDER ROTATIONAL NOISE FROM ISOLATED ROTORS

The connection between high-order rotational noise (that is, radiation at high multiples of the rotational frequency) and unsteady blade forces has been mentioned already in the section on radiation and cut-off. During the 1960's it was gradually recognized that very low levels of circumferential distortion in the flow entering a rotor could lead, via unsteady forces, to significant tone radiation. The fact that steady blade forces could not account for all the rotational sound observed from low-speed rotors had been demonstrated by Hicks and Hubbard [111, 1947], who ran propellers at tip Mach numbers down to 0·3 with 2, 4 and 7 blades. Filleul [112, 1966] reached the same conclusion from experiments on a low-speed axial fan rotor; moreover he found that the "excess" noise could be reduced by placing the rotor downstream of a honeycomb flow straightener. These tests provided strong evidence in support of Prandtl's original supposition [10, 1921], that asymmetry and unsteadiness in the inlet flow were responsible for tone radiation.

At about the same time, computational studies had been carried out by Schlegel *et al.* [113, 1966] and Loewy and Sutton [114, 1966] in an attempt to relate helicopter main-rotor noise to the fluctuating blade forces. Both studies used Scheiman's tabulation of unsteady blade loads [115, 1964] to predict the corresponding harmonic sound field, which was then compared with measurements. Reasonable agreement was found by Schlegel *et al.* for rotational orders up to 12; at higher frequencies the predicted levels were far too low, as was inevitable in view of the limited frequency range covered by the loading data. Nevertheless the practical significance of unsteady blade forces for helicopter rotor noise was clearly established.

A considerable advance towards understanding the radiation from unsteady forces on rotating blades was made when Lowson and Ollerhead [116, 1969] and Wright [55, 1969] showed that the point-loading approximation could be used to predict the main features of the sound field analytically. The effects of distributing the blade forces over the chord and

† With the difference that 5% bandwidth analysis (rather than 1/3 octave) had been used to extract broadband spectrum levels.

span were studied on a numerical model by Wright and Tanna; their main findings have been summarized by Wright [56, 1971], who has given simple explanations of the trends observed in the numerical results.

As a standard of comparison for approximate methods such as those mentioned above, a general computer programme was developed by Tanna [117, 1970] to calculate harmonic radiation patterns from the differential-pressure time history at a number of discrete points on a rotor blade. Interestingly, when Scheiman's data [115, 1964] were used as input, the programme gave results very similar to the point loading approximation suggested by Lowson and Ollerhead.

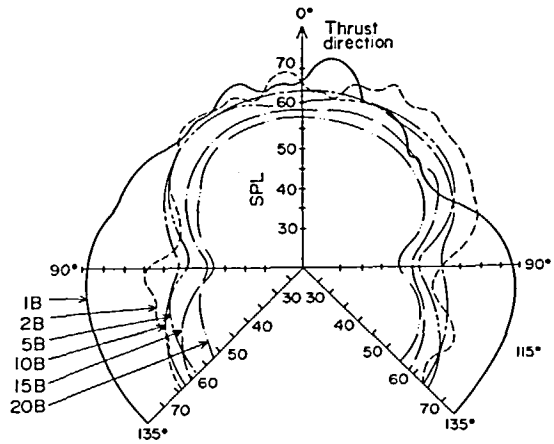

Figure 5. Polar plots of rotational noise obtained from model rotor tests (tip Mach number 0·35, blade pitch 12°). Blade passing harmonics: ——, 1; – – –, 2; — — —, 5; — — — —, 10; —·—, 15; —· ·—, 20.

The directional properties of individual harmonics were studied on an isolated helicopter-type rotor by Stainer [118, 1969], who traversed a microphone in an axial plane to obtain detailed polar radiation patterns. The measurements were made in an anechoic room, and covered rotational orders from 1 to 60; Figure 5 shows a typical set of results. Apart from the peak just below the rotor disk at the blade-passing frequency, which is accounted for quite accurately by the steady torque and thrust, the polar patterns all show the general figure-of-eight shape predicted for unsteady-lift radiation (compare references [55], [116] and [54]).

An interesting feature of Stainer's results, also noted by Filleul and by Hicks and Hubbard in their open-rotor tests and by Barry and Moore [119, 1971] on a ducted fan rotor, was the unsteadiness of the higher rotational harmonics. The harmonic levels at a fixed point were found to fluctuate in a random manner, with several excursions of around 5 dB during a ten-second period. This suggests, as Barry and Moore pointed out, that a significant part of the unsteady-lift radiation arises from *fluctuating* distortions in the inlet flow. Precisely how far the tone fluctuations are due to fluctuating inlet distortions, and how far to broadband noise contained within the filter bandwidth, can easily be determined by analysing the spectrum in successively narrower frequency bands—although ten years ago when early aircraft-engine measurements exhibited similar fluctuations, suitable analysis equipment was not available and there was some controversy on this point; see the papers by Griffiths [120, 1964] and Bragg and Bridge [93, 1964].

Finally, Chandrashekhara [121, 122, 1971] was able to measure the random fluctuations of inlet velocity in sufficient detail on a particular low-speed rotor to allow the blade-passing tone to be calculated. The measured tone signal showed a finite bandwidth corresponding

to the bandwidth of the low-frequency velocity fluctuations entering the rotor, while the sound power in the blade-passing tone was around 5 dB higher than estimated.

10. ROTOR/TIP-VORTEX INTERACTION

In the early 1960's it became clear that blade slap, when it occurred, was the most prominent feature of helicopter noise. Blade slap—a sharp "cracking" or "banging" associated with the main rotor—is particularly objectionable because of its impulsive nature. It was, and to some extent still is, a major problem on tandem rotor helicopters with large blade overlaps and two-bladed single rotor helicopters with high blade loading; flight regions particularly prone to blade slap are low-power descents and banking turns. An early suggestion by Cox and Lynn [123, 1962] was that the impulsive sound arose from compressibility effects at high subsonic tip speeds; but the survey of blade slap occurrences reported by Leverton and Taylor [124, 1966] suggested that in most instances the cause was some kind of interaction between the blades and their trailing tip vortices. Credibility was given to the latter idea by a photograph of a Westminster helicopter in humid conditions, reproduced in a recent review by Leverton [125, 1971], in which the tip vortex from one of the blades could be seen protruding above the rotor disk. Some early experiments at Southampton by Simons *et al.* [126, 1966] had also shown that this could occur.

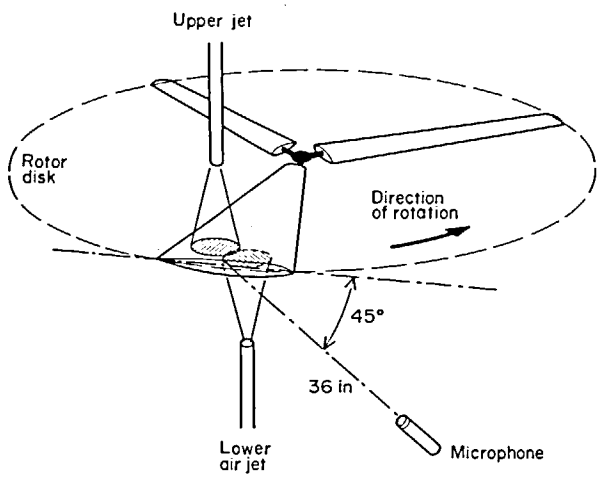

Figure 6. Blade slap simulation tests—general arrangement.

The blade/vortex interaction mechanism was simulated in the laboratory by Leverton [124, 1966], using two opposed air jets to generate a localized "vortex" (Figure 6). The work of McCormick [127, 1963] and Simons [128, 1966] provided an indication of what "core size" should be used. The resulting sound field, in the form of blade-passing harmonics, was measured and found to compare favourably with a simple point-force theory, based on an approximate version of Küssner's function [30, 1941] for the unsteady lift response. In addition, the shape of an individual pressure pulse in the far field agreed fairly well with the theory (Figure 7). The air-jet technique has been further developed by Whatmore [129, 1969] and Amor and Leverton [130, 1972] as a means of studying more general types of gust leading.

Attempts to apply the vortex interaction model to real helicopters ran into difficulties over defining the blade/vortex configuration in flight. Some flight tests were performed by Westland Helicopters Ltd. in connection with laboratory work at Southampton, and have since been reported by Leverton [131, 1972]; it was shown that a rigid wake model could be

used for a rough prediction of the point during the blade revolution at which blade slap occurs. Indirect support was thus provided for the blade/vortex interaction mechanism. Boeing Vertol subsequently performed similar tests on a tandem rotor [132, 1967] which confirmed that a "bang" occurred when a blade intersected a tip vortex, and that its position could be estimated from the simple rigid wake approach.

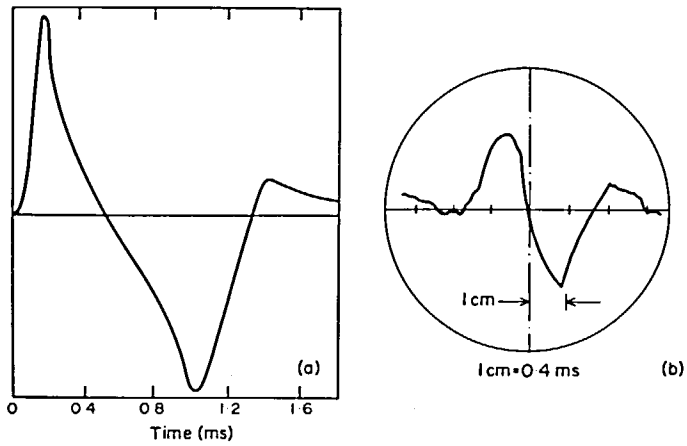

Figure 7. Comparison of (a) theoretical and (b) measured blade slap signatures. Amplitudes not to scale.

Until the interaction process can be described in more detail, however, absolute amplitude predictions do not appear possible. Leverton [133, 1968; 125, 1971] has therefore proposed a "blade slap factor" for predicting the maximum severity of blade slap, on the assumption that the blade cuts directly through the centre of the vortex. The important rotor parameters were identified as the spanwise blade loading (L) and the relative tip speed (V_{tip}); the sound power associated with blade slap was shown to vary as $L^2 V_{tip}^2$. A rating scale based on this quantity has been set up by Leverton [131, 1972], using blade slap measurements and subjective assessments obtained on a wide range of helicopters.

11. INTERACTION BETWEEN MOVING BLADE ROWS

The periodic forces set up by aerodynamic interaction between moving blade rows have long been recognized as a source of blade vibration. The fact that they are accompanied by sound radiation in a slightly compressible fluid became of practical interest in the early 1960's, when the whine of jet-engine compressors was traced to rotor–stator interaction (see section 4), and it was possible to take over various results from unsteady airfoil theory. The most useful of these were the Kármán–Sears theory for the lift due to convected sinusoidal gusts [27, 1938], which could be applied directly to blades operating in the wake of an upstream row, and the Kemp–Sears model for potential-field interaction between two blade rows [33, 1953]. An interesting early estimate of periodic blade forces was made by Söhngen [134, 1941], who considered both types of interaction on a contra-rotating propeller; graphical results were presented to show the now well-known dependence of the unsteady lift on the axial separation between the blade rows.

Over the last ten years the acoustic consequences of blade-row interaction have been studied in detail, mainly in the interests of reducing aircraft noise. An outline of the main findings is given in the paragraphs which follow.

11.1. EXPERIMENTAL EVIDENCE FROM RADIATION PATTERNS

Early evidence of rotor–stator interaction as a source of aircraft engine noise came from the directionality of the tones radiated from the compressor inlet. Tyler and Sofrin's analysis of rotor–stator interaction in an axisymmetric duct [46, 1962] showed that the qth blade-passing harmonic would be restricted to modes of circumferential order $qB + sV$, if the sound was due to interaction with a row of V equally-spaced vanes; far-field measurements presented in the same paper showed that if any of these modes was excited above its cut-off frequency, it could be clearly identified in the radiation pattern. More detailed measurements were later made at Bristol–Siddeley Engines Ltd. by traversing a microphone around the compressor inlet (Plate 1). The results, reported by Morfey [49, 1964] and Morfey and Dawson [90, 1966], showed that rotor–stator interaction was responsible for much of the blade-passing energy radiated from aircraft engines.

In principle, the same mechanism can generate tones at any multiple (n) of the shaft rotation frequency; the relative energy in the different tones depends on the rotor geometry, and also on the mode order $n - sV$. Only for a perfectly symmetrical rotor is the tone spectrum limited to multiples of the blade-passing frequency. Multiple tones generated by subsonic fans have been identified by Mather *et al.* [135, 1971] and Cumpsty [136, 1972]; the inlet radiation patterns at these frequencies again showed the presence of rotor–stator interaction modes.

11.2. INTERACTION MECHANISMS

Both the periodic blade forces and the strength of the interaction tones depend on the flow distortion which each blade row imposes on the other. A model for the potential flow field of a lifting blade row has been given by Kemp and Sears [33, 1953]; the work of Parker [137, 1970] has since shown that blade thickness, which Kemp and Sears neglected, may make an appreciable contribution. For describing the wake interaction mechanism, a useful summary of wake data is contained in the work of Lieblein and Roudebush [138, 139, 1956], which has been supplemented with more recent wake measurements by Mugridge and Morfey [101, 1972].

When the distance between blade rows is much less than the spacing of the blades, potential-flow interaction is expected to be significant; but the exponential decay of the non-uniform potential field leaves the upstream blade wakes as the main cause of interaction at larger distances. Evidence for potential-flow interaction in axial flow compressors is the rise of several decibels in blade-passing tone level at separations of less than one blade chord, as reported by Kilpatrick and Reid [140, 1964], Dawson and Voce [141, 1965], and Fincher [142, 1966]. An empirical prediction scheme for rotor–stator interaction tones which accounted for this feature was put forward by Smith and House [107, 1967].

Interaction between blades in relative motion also plays an important part in tandem-helicopter noise. Dodson [143, 1969] measured the blade-passing harmonics radiated from a model tandem rig with different clearances between the rotor planes, and found large increases in level as the clearance was reduced.

11.3. BLADE-PASSING TONE PREDICTIONS

The first order-of-magnitude estimates of blade-passing sound due to stator–rotor interaction were made by Hetherington [144, 1963], who combined the unsteady lift theories of Sears and Kemp mentioned earlier with a radiation model in which each blade was regarded as a line force. Hetherington's approach was later developed by Morfey [145, 1970] to yield simplified analytical predictions for both potential-flow and wake interactions in terms of

blade lift and drag coefficients. The results showed order-of-magnitude agreement over the subsonic speed range when compared with aircraft-engine measurements [59, 1972].

Peirce [146, 1972] used detailed measurements of the blade-passing flow field behind a low-speed fan rotor to predict the interaction noise radiated from a downstream stator. The rotor and stator had the same number of blades, so the predictions could be checked by measuring on the upstream fan axis. At a rotor–stator separation of 15% of the blade tip spacing, the measured blade-passing tone level was about 20 dB higher than the stator noise prediction, indicating that the rotor was the main source. This was confirmed by increasing the separation to 25% and then 40%; the tone level fell off in the manner predicted for potential-flow interaction. A further increase in separation to 65% produced little effect, with the measured levels remaining 2 to 9 dB above the prediction. The residual discrepancy may have been due to narrow-band noise associated with unsteadiness in the wake pattern relative to the rotor (compare section 9).

For chord/wavelength ratios greater than about 1/2, calculations based on incompressible unsteady airfoil theory cease to be valid and a completely different approach is required (see section 6). Some progress in this direction has been reported by Kaji and Okazaki [147, 1970], who set out to solve the simultaneous integral equations for the periodic loading distribution on a pair of interfering blade rows. Both steady blade loading (potential interaction) and profile drag (wake interaction) were accounted for, but because the interference field of each blade row was modelled by a single harmonic component the accuracy of the calculation is limited, especially at high subsonic Mach numbers.

11.4. SECONDARY INTERACTION TONES

Multi-stage axial compressors are able to generate an additional set of tones, in which the blade-passing harmonics from two different rotors are combined to form sum or difference frequencies. The two sets of rotor blades need not even be on the same shaft—see, for example, the bypass fan spectrum in reference [49]. The origin of such tones has been explained by Sofrin and Pickett [148, 1970]. When an interaction mode from one rotor–stator combination is transmitted through another rotor, a "secondary interaction" occurs and a series of different modes are excited. Part of the transmitted sound may therefore appear in modes of different circumferential order, and hence different frequency, from the incident sound (compare section 12 below). Under favourable conditions, more energy may be radiated in one of the secondary modes than in the primary incident mode.

12. SOUND TRANSMISSION THROUGH BLADE ROWS

Sound waves incident on a row of blades can suffer significant transmission losses, whose nature depends on whether the acoustic wavelength is large or small compared with the blade chord. In the first limit, the only mechanism available is the conversion of acoustic energy into shed vorticity; here the trailing edge condition plays a critical role. In the second limit, the trailing edge condition is less important; for wavelengths which are small compared with the blade spacing as well as the chord, the blade row simply acts as a geometric reflector of sound.

Various theoretical models have been developed in which the blade row is represented by a two-dimensional cascade, and the Kutta condition is assumed to hold instantaneously at the trailing edge. The simplest is Amiet's actuator-disk model [149, 1971], which is a compressible version of a model put forward for blade vibration by Whitehead [150, 1959]. Amiet assumed both the blade chord and spacing to be small compared with the wavelength,

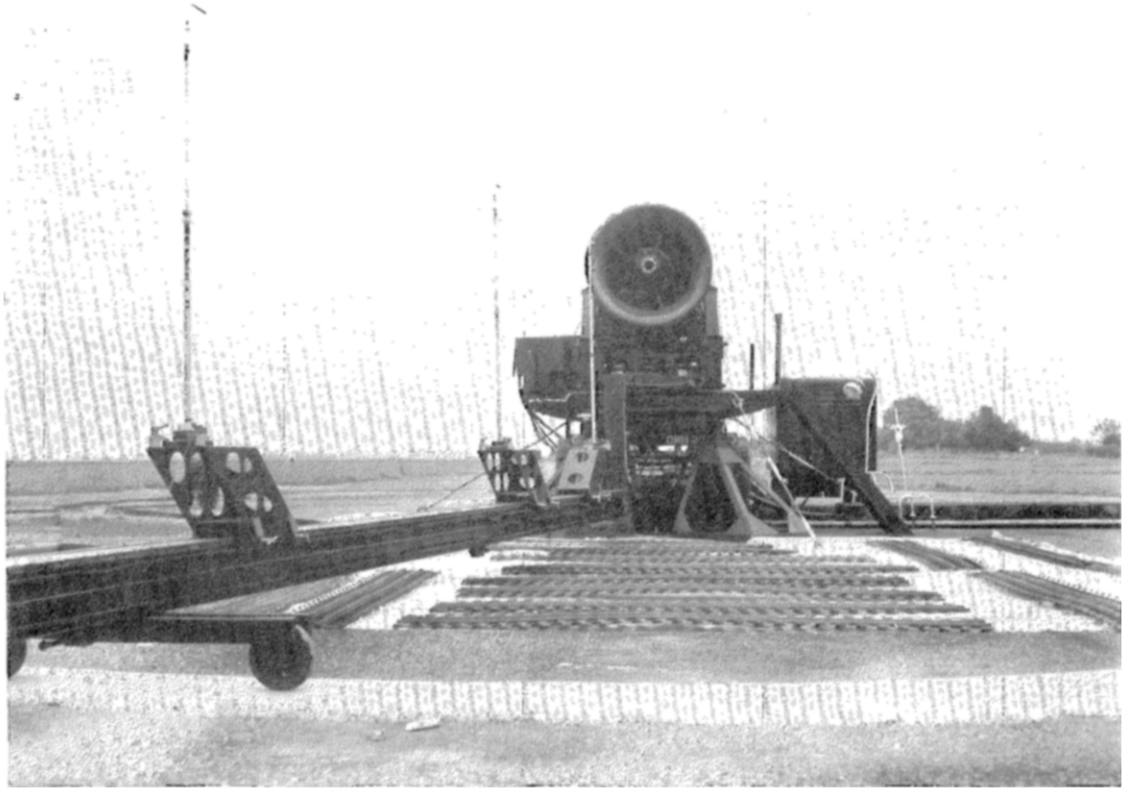

Plate 1. Engine test stand with microphone boom for continuous angular traverses. Photograph by courtesy of Rolls-Royce (1971) Ltd., Bristol Engine Division.

(facing p. 606)

and calculated the transmission loss due to vortex shedding as a function of Mach number. In fact the effect of chord/wavelength ratio on transmission loss is quite small at small spacings; this was demonstrated by Kaji and Okazaki [151, 1970] for a flat-plate cascade, using an ingenious generalization of the actuator disk idea to allow arbitrary l/λ values.

When the wavelength is comparable with the blade spacing or less, the actuator-disk type of model is no longer valid and the scattering of sound from individual blades has to be accounted for. A single incident wave, or mode, gives rise to transmitted waves in several directions when the spacing/wavelength ratio d/λ is large. A numerical method of solution which remains valid in this situation was given by Kaji and Okazaki [78, 1970], while Mani and Horvay [152, 1970] and Koch [80, 1971] subsequently obtained analytical solutions in series form (see also section 6).

At d/λ values greater than 1/2, measurements of broadband inlet noise from multi-stage fans and compressors show that the radiation is concentrated in a beam within about 60 degrees to the axis. This behaviour has been interpreted by Morfey [109, 1970] in terms of geometric reflection; sound generated downstream of the first row of blades is prevented from escaping at larger angles to the axis by the intervening blade surfaces. Another phenomenon which can be explained qualitatively by the same argument is the "venetian blind effect" observed by Mather *et al.* [135, 1971] and Cumpsty [136, 1972], whereby a staggered blade row discriminates between modes of the same order rotating in different directions.

Apart from these qualitative observations, and some circumstantial evidence discussed by Mani and Horvay, the only quantitative measurements available are those of Chestnutt [153, 1972] who investigated the transmission of blade-passing tones through the inlet guide vanes of a research compressor. Under the test conditions, which were limited to Mach numbers around 0·3 through the guide vanes and to low frequencies (d/λ less than 1/2), the predicted transmission loss was generally less than 5 dB and was difficult to detect within the experimental error. Nevertheless the results tended to support the Kutta-condition assumption, in that measurable reductions consistent with the theory were found under conditions where the transmission loss would have been negligible apart from vortex shedding.

13. THE INSTANTANEOUS KUTTA CONDITION

Billing [17, 1946] seems to have been the first to point out the significance of the trailing-edge condition for sound radiation from airfoils, although its significance in unsteady aerodynamics had been appreciated for some time. The usual assumption made to account for boundary layer effects in unsteady airfoil theory is to assume that the flow separates from both surfaces at the trailing edge, with no singularity in the pressure jump at the edge. A thin sheet of vorticity is then shed from the sharp edge, which in reality is generated by viscous action in the airfoil boundary layer.

The fact that the boundary layer has a finite thickness at the trailing edge is not accounted for in the model described above. Some of the effects of finite boundary-layer thickness have been discussed theoretically by Sears [154, 1956], and van de Vooren [155, 1958] has reviewed the semi-empirical modifications to the above Kutta condition which have been used in unsteady airfoil theory.

That some modification is in general necessary is indicated by the experiments mentioned at the end of section 3. On the other hand, the sound-generation experiments of Smith [77, 1971] and the sound-transmission experiments of Chestnutt [153, 1972], at reduced frequencies of order 2 and 5 respectively, are both consistent with the Kutta condition. Present experimental information is clearly inadequate for deciding when the Kutta condition may be used for blade noise predictions and when it breaks down.

14. SUPERSONIC ROTOR NOISE

A rotor operating at Mach numbers of order one carries round with it a relatively strong pressure field, associated with the local deflection of the flow by the blade surfaces. Because the variations in pressure near the rotor are not small compared with ρc^2, the linearized wave equation is a poor approximation in this region. On the other hand, as long as the rotor remains subsonic, its near field decays rapidly with distance and the role of non-linear effects is limited.

As the relative Mach number is increased through one, however, the near-field decay predicted by linear theory becomes less effective. High pressure amplitudes therefore persist for larger distances, and non-linearity causes shock waves to form. These are clearly shown in some early shadowgraph pictures of a 2-bladed propeller at transonic speeds which were taken by Hilton [156, 1938].

The transition is most evident for a rotor in a concentric uniform duct of the same diameter. The rotor blades excite acoustic duct modes which all rotate at the rotor speed. The high-order modes, corresponding to high-frequency components of the rotor field, begin to propagate at relative tip Mach numbers just above one; while as the Mach number is further increased, modes of lower order are able to propagate along the duct and hence take part in the shock formation process.

The formation of shock waves has two significant effects on the sound radiated from a supersonic rotor. One is that the sound power at multiples of blade-passing frequency is *less* than linear theory would predict. The other is that small differences between blades lead to comparatively large irregularities in the rotor shock pattern, and thus to multiple tones based on the shaft rotation rate. These effects are discussed in more detail below.

14.1. BLADE-PASSING RADIATION FROM SUPERSONIC ROTORS

The measurements of Hubbard and Lassiter [16, 1952] have already been mentioned in section 2. Hubbard and Lassiter studied the blade-passing harmonics radiated by a 2-bladed propeller at tip Mach numbers up to 1·3; they found good agreement between measured peak levels and predictions based on linear theory for Mach numbers up to a limiting value, which was different for different harmonics. Beyond this value the measurements fell substantially below the predictions.

The tip Mach numbers at which the linear theory began to break down were approximately 1·3 ($qB = 4$), 1·2 ($qB = 8$) and 1·1 ($qB = 12$). It is interesting to compare these values with the Mach numbers at which the corresponding pressure patterns would begin to propagate in a cylindrical duct, which are 1·33, 1·21 and 1·16. The similarity supports the idea that non-linear effects have comparatively little influence on the direct radiation from a "cut-off" component of the rotor field (see also the end of section 2).

The blade-passing radiation from a ducted supersonic rotor was studied theoretically by Morfey [157, 1969], who used a weak-shock model with the rotor represented by a two-dimensional cascade. Because of the confinement of the shock pattern within the duct, pressure amplitudes tend to remain higher and non-linear effects persist to greater distances than for an unducted propeller. The shock strength predicted for a rotor with identical equally-spaced blades varies inversely with distance beyond a few wavelengths from the rotor, and is independent of the blade geometry; at distances of this order, Morfey and Fisher [158, 1970] found reasonable agreement between outer-wall pressure measurements and the weak-shock model. However, at larger distances the inevitable presence of blade-to-blade irregularities has a cumulative effect on the shock pattern and eventually controls the whole spectrum, as described below.

14.2. MULTIPLE-TONE GENERATION

Attention was first drawn to the multiple-tone or "buzz-saw" phenomenon by Sofrin and McCann [159, 1966]. During tests on aircraft-engine fans at rotor tip Mach numbers around one and above, they noted a series of tones in the far-field spectrum at multiples of the shaft rotation rate. Sofrin and Pickett [148, 1970] subsequently published in-duct measurements which showed that the shaft-order tones were produced in the rotor duct by non-linear effects. At the rotor face, the frequency spectrum in the duct was dominated by blade-passing harmonics; but by the time the pressure field had progressed half a rotor diameter upstream, the blade-passing frequency was indistinguishable among the other tones. Similar measurements by Philpot [160, 1971] revealed significant low-order rotational harmonics in the rotor near field even at subsonic speeds; but they did not appear in the far field until the rotor speed was higher than the cut-off value for each harmonic.

Theoretical models of multiple-tone generation have been put forward by Hawkings [161, 1971], Kurosaka [162, 1971] and Pickett [163, 1972]. Hawkings's analysis gives the pressure field at any position in the rotor duct, once an initial pressure distribution has been specified at one cross-section. Pickett and Kurosaka were able to relate the upstream shock pattern to the blade geometry, by noting that the dividing Mach lines must intercept each blade at a point where the surface is parallel to the free stream. A limitation is that no allowance is made for the intersection of shocks with dividing Mach lines or adjacent shocks, although Sofrin and Pickett's results show this happening. The analyses nevertheless give a useful guide to the effect of given blade irregularities on the multiple tone spectrum.

15. IN-DUCT MEASUREMENT TECHNIQUES

There are certain advantages in being able to measure fan noise within the fan duct, rather than outside. One is that different duct terminations (e.g., anechoic, open end) can easily be used. Another is that a special acoustic room (anechoic, reverberant) is not needed, and also it may be more convenient to traverse a microphone across the duct than in the external sound field. Potential disadvantages of in-duct measurement are microphone wind noise (particularly when the duct flow is highly turbulent), distortion of the sound field by the microphone, and additional sound generation by the fan as a result of wakes from upstream probes.

Tyler and Sofrin [46, 1962] used probe microphones to define the rotating pressure field just upstream of a ducted axial-fan rotor; the signals from two circumferentially displaced probes were filtered at the blade-passing frequency, and displayed on an oscilloscope triggered once per shaft revolution to determine the phase shift. Moore [164, 1972] has described an extension of this technique, in which a probe microphone signal is cross-correlated with a reference signal at the shaft rotational frequency; thus components of the duct sound field which do not repeat exactly every rotor revolution are rejected.

For a complete analysis of the phase-locked sound field into duct modes, Yardley [165, 1973] has proposed a technique which avoids the practical difficulties of mounting probes in the flow. Instead, the sound field in the duct is measured at a number of axial and circumferential positions on the duct wall. The method requires a prior knowledge of the axial propagation characteristics of each mode, which is the price paid for not traversing across the duct section.

The signal eduction techniques described above cannot be applied to non-periodic signal components. It is nevertheless possible to estimate the modal content of the duct sound field in a given frequency band. A simple technique based on measurements of the mean square pressure at certain points over the duct cross-section was proposed by Bolleter and Chanaud

[166, 1971]; the idea is the same as that of identifying modes in the far field from their radiation patterns (see section 11), and relies on only a few modes being present.

A more powerful approach, which can deal in principle with any number of duct modes and avoids the problem of microphone wind noise, is to use two probes and make cross-spectral density measurements. Mugridge [167, 1969] developed a simple version using two hot-wire anemometers, and was able to resolve a sound field consisting of two modes in a narrow annular duct. Subsequently Bolleter and Crocker [168, 1972] and Harel and Perulli [169, 1972] have developed more general two-microphone techniques which allow the modal structure to be identified at any cross-section of the duct by means of radial and circumferential traverses.

An annular flow duct facility has been developed by Plumblee and Dean [170, 1973] in which radial, circumferential and axial traversing (and/or sampling) is possible. Both the in-duct sound field and the field radiated from the duct termination into an acoustic room can be measured. Modal radiation impedances can be determined from the in-duct measurements and evaluated with respect to the measured far-field radiation pattern.

16. CENTRIFUGAL FLOW MACHINES

Very little basic work has been done on the aerodynamic noise of centrifugal fans and blowers, despite their widespread use in ventilating and air-conditioning plant. A survey of noise data from a variety of ventilating fans was undertaken by Allen [171, 1957], who deduced empirical rules for predicting the overall sound power and its spectral distribution; but because these took no account of the blade geometry or other details, it was not surprising that errors of 10 dB could occur in particular cases (see reference [157] for example).

Hübner carried out a series of experiments [172, 1959; 173, 1963] in an attempt to define the sources of broadband sound radiation. Blade-passing noise was minimized by running the impeller either in an axisymmetric housing or in the open, and the impeller noise was measured with and without blades attached to the disk. At about the same time, Embleton [174, 1963] measured the blade-passing noise of a centrifugal fan for various positions of the cut-off tongue, and found that the noise could be reduced either by increasing the clearance between the cut-off and impeller, or by inclining the cut-off so as to span two or more blades simultaneously. Present understanding of source mechanisms in centrifugal machines is still largely embodied in these papers of ten years ago.

Because centrifugal ventilating fans typically operate at low Mach numbers and with partially stalled flow in the impeller, most of the sound power they generate is at low frequencies where the wavelength is larger than the impeller diameter. For this reason, the sound power output is strongly affected by the reflection properties of the inlet and discharge ducting—see, for example, the measurements of Groff [175, 1964]. Fortunately, acoustic analysis of the fan-duct system is relatively straightforward at large wavelengths. Yeow [176, 1969] and Cremer and co-workers [177, 1971] have successfully used one-dimensional acoustic models to interpret measurements of fan noise under different radiation conditions.

On the other hand an understanding of the unsteady flow processes which excite the sound field appears still to be some way off. Detailed measurements of the flow in centrifugal impellers, such as those of Howard and Lennemann [178, 1971] and Anders [179, 1968], have only recently begun to provide the information needed for this purpose.

ACKNOWLEDGMENTS

The author wishes to thank the several people who have helped in the preparation of this survey. In particular John W. Leverton, Head of Applied Acoustics, Westland Helicopters,

contributed essential material on helicopter rotor noise and blade/vortex interaction, and provided Figures 2 and 5–7. J. R. Brooks, Rolls-Royce (Bristol) provided Plate 1. Additional references and historical information were supplied by T. G. Sofrin, Pratt and Whitney Aircraft. The survey was compiled in the course of a six-month stay at the Max-Planck-Institut für Strömungsforschung, Göttingen, under the auspices of Professor Dr E.-A. Müller, and was typed by Frl. Gossieaux and Frl. Rogier.

REFERENCES

1. P. Lloyd 1959 *Journal of the Royal Aeronautical Society* **63**, 541–548. Some aspects of engine noise.
2. E. J. H. Lynam and H. A. Webb 1919 *Advisory Committee for Aeronautics (London), R. & M. No.* 624. The emission of sound by airscrews.
3. G. H. Bryan 1920 *Aeronautical Research Committee (London), R. & M. No.* 684. The acoustics of moving sources with application to airscrews.
4. L. Gutin 1936 *Zhurnal tekhnicheskoi fiziki* **6**, 899–909. (In Russian.) Translated as 1948 NACA TM 1195: On the sound field of a rotating airscrew.
5. A. F. Deming 1937 *NACA TN* 605. Noise from propellers with symmetrical sections at zero blade angle.
6. A. F. Deming 1938 *NACA TN* 679. Noise from propellers with symmetrical sections at zero blade angle, II.
7. L. Gutin 1942 *Zhurnal tekhnicheskoi fiziki* **12**, 76–83. (In Russian.) Translated as British National Lending Library for Science and Technology RTS 7543: On the "rotational sound" of an airscrew.
8. Anon 1920 *Aeronautical Research Committee (London), R. & M. No.* 694. The sounds of aeroplanes.
9. E. Waetzmann 1921 *Zeitschrift für technische Physik* **2**, 166–172. (In German.) The origin and nature of aircraft noise.
10. L. Prandtl 1921 *Zeitschrift für technische Physik* **2**, 244–245. (In German.) Remarks on aircraft noise.
11. E. Z. Stowell and A. F. Deming 1935 *NACA Report* 526. Noise from two-blade propellers.
12. J. Obata, Y. Yosida and U. Yosida 1936 *Report of the Aeronautical Research Institute, Tokyo Imperial University* **11** (No. 134), 61–79. On the directional properties of airscrew sound.
13. W. Ernsthausen 1936 *Luftfahrtforschung* **13**, 433–440. (In German.) Translated as 1937 NACA TM 825: On the origin of propeller noise.
14. A. F. Deming 1940 *Journal of the Acoustical Society of America* **12**, 173–182. Propeller rotation noise due to torque and thrust.
15. W. Ernsthausen 1941 *Akustische Zeitschrift* **6**, 245–261. (In German.) Influence of aerodynamic characteristics on the sound field and radiated power of an airscrew. Also published as *Luftfahrtforschung* **18**, 289–304 (1941).
16. H. H. Hubbard and L. W. Lassiter 1952 *NACA Report* 1079. Sound from a two-blade propeller at supersonic tip speeds.
17. H. Billing and H. Merbt 1946 *Monograph R* in *Monographien über Fortschritte der deutschen Luftfahrforschung (seit* 1939), *Göttingen: Aerodynamische Versuchsanstalt.* (In German.) Translated as 1947 M.A.P. Völkenrode Reports and Translations Nos. 960–962: Modern aeronautical acoustics.
18. H. Merbt and H. Billing 1949 *Zeitschrift für angewandte Mathematik und Mechanik* **29**, 301–311. (In German.) The propeller as a rotating sound source.
19. H. G. Küssner 1944 *Zeitschrift für angewandte Mathematik und Mechanik* **24**, 243–250. (In German.) Solutions of the classical wave equation for moving sources.
20. I. E. Garrick and C. E. Watkins 1954 *NACA Report* 1198. A theoretical study of the effect of forward speed on the free-space sound-pressure field around propellers.
21. C. L. Morfey 1972 *Journal of Sound and Vibration* **23**, 291–295. The sound field of sources in motion.
22. R. A. Arnoldi 1956 *United Aircraft Corporation Research Department, East Hartford, Connecticut, Report R*-0896-1. Propeller noise caused by blade thickness.
23. R. A. Arnoldi 1956 *United Aircraft Corporation Research Department, East Hartford, Connecticut, Report R*-0896-2. Near-field computations of propeller blade thickness noise.

24. H. G. KÜSSNER 1936 *Luftfahrtforschung* **13**, 410–424. (In German.) Review of unsteady lift on wings.
25. L. SCHWARZ 1940 *Luftfahrtforschung* **17**, 379–386. (In German.) Calculation of the pressure distribution on a harmonically deforming airfoil in plane flow.
26. H. G. KÜSSNER 1940 *Luftfahrtforschung* **17**, 355–361. (In German.) The two-dimensional problem of an airfoil in arbitrary motion, with allowance for non-uniform motion of the fluid.
27. T. VON KÁRMÁN and W. R. SEARS 1938 *Journal of the Aeronautical Sciences* **5**, 379–390. Airfoil theory for non-uniform motion.
28. W. R. SEARS 1941 *Journal of the Aeronautical Sciences* **8**, 104–108. Some aspects of non-stationary airfoil theory and its practical application.
29. I. E. GARRICK 1938 *NACA Report* 629. On some reciprocal relations in the theory of non-stationary flows.
30. W. R. SEARS and B. O. SPARKS 1941 *Journal of the Aeronautical Sciences* **9**, 64–67. On the reaction of an elastic wing to vertical gusts.
31. H. W. LIEPMANN 1952 *Journal of the Aeronautical Sciences* **19**, 793–800 and 822. On the application of statistical concepts to the buffeting problem.
32. N. H. KEMP 1952 *Journal of the Aeronautical Sciences* **19**, 713–714. On the lift and circulation of airfoils in some unsteady flow problems.
33. N. H. KEMP and W. R. SEARS 1953 *Journal of the Aeronautical Sciences* **20**, 585–597 and 612. Aerodynamic interference between moving blade rows.
34. W. E. A. ACUM 1963 *Aeronautical Research Council (London), C.P. No.* 681. The comparison of theory and experiment for oscillating wings.
35. G. M. LILLEY 1952 *College of Aeronautics, Cranfield, Report No.* 60. An investigation of the flexure-torsion flutter characteristics of aerofoils in cascade.
36. F. SISTO 1955 *Journal of the Aeronautical Sciences* **22**, 297–302. Unsteady aerodynamic reactions on airfoils in cascade.
37. D. S. WHITEHEAD 1962 *Aeronautical Research Council (London), R. & M. No.* 3254. Force and moment coefficients for vibrating aerofoils in cascade.
38. J. H. HORLOCK 1968 *Proceedings of the 3rd Australasian Conference on Hydraulics and Fluid Mechanics, Sydney*, 221–227. Unsteady flow in turbomachines.
39. J. H. HORLOCK 1968 *Journal of Basic Engineering: Transactions of the American Society of Mechanical Engineers (Series D)* **90**, 494–500. Fluctuating lift forces on aerofoils moving through transverse and chordwise gusts.
40. C. L. MORFEY 1970 *Journal of Basic Engineering: Transactions of the American Society of Mechanical Engineers (Series D)* **92**, 663–665. Lift fluctuations associated with unsteady chordwise flow past an airfoil.
41. L. T. FILOTAS 1969 *University of Toronto, UTIAS Report No.* 139. Theory of airfoil response in a gusty atmosphere. Part I. Aerodynamic transfer function.
42. B. D. MUGRIDGE 1971 *Aeronautical Quarterly* **22**, 301–310. Gust loading on a thin aerofoil.
43. J. M. R. GRAHAM 1970 *Aeronautical Quarterly* **21**, 182–198. Lifting surface theory for the problem of an arbitrarily yawed sinusoidal gust incident on a thin aerofoil in incompressible flow.
44. L. T. FILOTAS 1971 *Journal of Aircraft* **8**, 395–400. Approximate transfer functions for large aspect ratio wings in turbulent flow.
45. J. H. PRINDLE 1961 *Boeing Airplane Company, Transport Division, Document D6-7538*. Whine noise in fan ducts.
46. J. M. TYLER and T. G. SOFRIN 1962 *Society of Automotive Engineers Transactions* **70**, 309–332. Axial flow compressor noise studies.
47. T. F. W. EMBLETON and G. J. THIESSEN 1962 *Journal of the Acoustical Society of America* **34**, 788–795. Efficiency of circular sources and circular arrays of point sources with linear phase variation.
48. C. L. MORFEY 1964 *Journal of Sound and Vibration* **1**, 60–87. Rotating pressure patterns in ducts: their generation and transmission.
49. C. L. MORFEY 1964 *Engineering* **198**, 782–783. How to reduce the noise of jet engines.
50. C. L. MORFEY 1969 *Journal of Sound and Vibration* **9**, 367–372. A note on the radiation efficiency of acoustic duct modes.
51. M. V. LOWSON 1970 *Journal of the Acoustical Society of America* **47**, 371–385. Theoretical analysis of compressor noise.
52. S. E. WRIGHT 1972 *Journal of Sound and Vibration* **25**, 163–178. Waveguides and rotating sources.

53. M. V. LOWSON 1965 *Proceedings of the Royal Society (London)* A **286**, 559–572. The sound field for singularities in motion.
54. C. L. MORFEY and H. K. TANNA 1971 *Journal of Sound and Vibration* **15**, 325–351. Sound radiation from a point force in circular motion.
55. S. E. WRIGHT 1969 *Journal of Sound and Vibration* **9**, 223–240. Sound radiation from a lifting rotor generated by asymmetric disk loading.
56. S. E. WRIGHT 1971 *Journal of Sound and Vibration* **17**, 437–498. Discrete radiation from rotating periodic sources.
57. J. E. FFOWCS WILLIAMS and D. L. HAWKINGS 1969 *Journal of Sound and Vibration* **10**, 10–21. Theory relating to the noise of rotating machinery.
58. C. L. MORFEY 1971 *Journal of Sound and Vibration* **14**, 37–55. Sound transmission and generation in ducts with flow.
59. C. L. MORFEY 1972 *Journal of Sound and Vibration* **22**, 445–466. The acoustics of axial flow machines.
60. R. MANI 1970 *Journal of Basic Engineering: Transactions of the American Society of Mechanical Engineers (Series D)* **92**, 37–43. Discrete frequency noise generation from an axial flow fan blade row.
61. L. A. VAINSHTEIN 1949 *Zhurnal tekhnicheskoi fiziki* **19**, 911–930. (In Russian). The theory of sound waves in open tubes.
62. D. L. LANSING 1969 in *Analytic Methods in Aircraft Aerodynamics, NASA SP*-228, 323–334. Exact solution for radiation of sound from a semi-infinite circular duct with application to fan and compressor noise.
63. M. J. LIGHTHILL 1952 *Proceedings of the Royal Society (London)* A **211**, 564–587. On sound generated aerodynamically. I. General theory.
64. LORD RAYLEIGH 1878 *Theory of Sound, Volume* II. London: Macmillan. See Chapter XV.
65. H. LAMB 1932 *Hydrodynamics*. Cambridge University Press, sixth edition. See article 291.
66. N. CURLE 1955 *Proceedings of the Royal Society (London)* A **231**, 505–514. The influence of solid boundaries upon aerodynamic sound.
67. J. E. FFOWCS WILLIAMS and D. L. HAWKINGS 1969 *Philosophical Transactions of the Royal Society (London)* A **264**, 321–342. Sound generation by turbulence and surfaces in arbitrary motion.
68. P. E. DOAK 1960 *Proceedings of the Royal Society (London)* A **254**, 129–145. Acoustic radiation from a turbulent fluid containing foreign bodies.
69. J. E. FFOWCS WILLIAMS and L. H. HALL 1970 *Journal of Fluid Mechanics* **40**, 657–670. Aerodynamic sound generation by turbulent flow in the vicinity of a scattering half-plane.
70. D. G. CRIGHTON and F. G. LEPPINGTON 1971 *Journal of Fluid Mechanics* **46**, 577–597. On the scattering of aerodynamic noise.
71. B.-T. CHU and L. S. G. KOVÁSZNAY 1958 *Journal of Fluid Mechanics* **3**, 494–514. Non-linear interactions in a viscous heat-conducting compressible gas.
72. C. L. MORFEY 1972 *Journal of Sound and Vibration* **24**, 273–274. Erratum: Effect of non-uniform entropy on rotor noise.
73. C. L. MORFEY 1971 *Journal of the Acoustical Society of America* **49**, 1690–1692. Tone radiation from an isolated subsonic rotor.
74. P. J. F. CLARK and H. S. RIBNER 1969 *Journal of the Acoustical Society of America* **46**, 802–805. Direct correlation of fluctuating lift with radiated sound for an airfoil in turbulent flow.
75. H. H. HELLER and S. E. WIDNALL 1970 *Journal of the Acoustical Society of America* **47**, 924–936. Sound radiation from rigid flow spoilers correlated with fluctuating forces.
76. N. J. LIPSTEIN and R. MANI 1970 *Journal of Basic Engineering: Transactions of the American Society of Mechanical Engineers (Series D)* **92**, 155–164. Experimental investigation of discrete frequency noise generated by unsteady blade forces.
77. S. N. SMITH 1971 *Department of Engineering, University of Cambridge, CUED/A-Turbo/TR* 29. Discrete frequency sound generation in axial flow turbomachines.
78. S. KAJI and T. OKAZAKI 1970 *Journal of Sound and Vibration* **11**, 355–375. Propagation of sound waves through a blade row. II. Analysis based on the acceleration potential method.
79. D. S. WHITEHEAD 1970 *Department of Engineering, University of Cambridge, CUED/A-Turbo/TR* 15. Vibration and sound generation in a cascade of flat plates in subsonic flow.
80. W. KOCH 1971 *Journal of Sound and Vibration* **18**, 111–128. On the transmission of sound waves through a blade row.
81. J. J. ADAMCZYK and R. S. BRAND 1972 *Journal of Sound and Vibration* **25**, 139–156. Scattering of sound by an aerofoil of finite span in a compressible stream.

82. E. Y. YUDIN 1944 *Zhurnal tekhnicheskoi fiziki* **14**, 561. (In Russian.) Translated as 1947 NACA TM 1136: On the vortex sound from rotating rods.
83. J. O. GODDARD and T. J. STUCKEY 1964 *Westland Helicopters Ltd., Report No. AAD* 4/1. Investigation and prediction of helicopter rotor noise. Subsequently published in 1967 *Journal of Sound and Vibration* **5**, 50–80.
84. I. M. DAVIDSON and T. J. HARGEST 1965 *Journal of the Royal Aeronautical Society* **69**, 325–336. Helicopter noise.
85. J. W. LEVERTON 1967 *Institute of Sound and Vibration Research Memorandum No.* 167. Helicopter noise. See also 1969 *Institute of Sound and Vibration Research Memorandum No.* 311.
86. J. W. LEVERTON 1972 *Westland Helicopters Ltd., Research Paper* 419. The noise characteristics of a large "clean" rotor. Subsequently published in 1973 *Journal of Sound and Vibration* **27**, 357–376.
87. A. POWELL 1959 *Journal of the Acoustical Society of America* **31**, 1649–1653. On the aerodynamic noise of a rigid flat plate moving at zero incidence.
88. G. M. LILLEY 1961 *Rolls-Royce Limited, Noise Panel Report.* On the vortex noise from airscrews, fans and compressors.
89. I. J. SHARLAND 1964 *Journal of Sound and Vibration* **1**, 302–322. Sources of noise in axial flow fans.
90. C. L. MORFEY and H. DAWSON 1966 *Bristol-Siddeley Engines Limited, TRH* 107. Axial compressor noise: some results from aero-engine research.
91. C. G. GORDON 1968 *Journal of the Acoustical Society of America* **43**, 1041–1048. Spoiler-generated flow noise. I. The experiment.
92. C. G. GORDON 1969 *Journal of the Acoustical Society of America* **45**, 214–223. Spoiler-generated flow noise. II. Results.
93. S. L. BRAGG and R. BRIDGE 1964 *Journal of the Royal Aeronautical Society* **68**, 1–10. Noise from turbojet compressors.
94. D. S. WHITEHEAD 1962 *Aeronautical Research Council (London), R. & M. No.* 3253. The analysis of blade vibration due to random excitation.
95. D. G. CRIGHTON 1972 *Proceedings of the Royal Society (London)* A **330**, 185–198. Radiation properties of the semi-infinite vortex sheet.
96. J. C. KELLY 1969 *Rolls-Royce Limited, Note No. RR (OH)* 400. Broadband fan noise due to vortex shedding.
97. B. D. MUGRIDGE 1971 *Journal of Sound and Vibration* **18**, 475–486. Turbulent boundary layers and surface pressure fluctuations on two-dimensional aerofoils.
98. H. H. SCHLOEMER 1967 *Journal of the Acoustical Society of America* **42**, 93–113. Effects of pressure gradients on turbulent-boundary-layer wall-pressure fluctuations.
99. B. D. MUGRIDGE 1971 *Journal of Sound and Vibration* **16**, 593–614. Acoustic radiation from aerofoils with turbulent boundary layers.
100. M. K. BULL 1963 *Department of Aeronautics and Astronautics, University of Southampton, AASU Report No.* 243. Revised version published in 1967 *Journal of Fluid Mechanics* **28**, 719–754. Wall pressure fluctuations associated with subsonic turbulent boundary layer flow.
101. B. D. MUGRIDGE and C. L. MORFEY 1972 *Journal of the Acoustical Society of America* **51**, 1411–1426. Sources of noise in axial flow fans.
102. D. S. JONES 1972 *Journal of the Institute of Mathematics and its Applications* **9**, 114–122. Aerodynamic sound due to a source near a half-plane. See section 3.
103. M. V. LOWSON, A. WHATMORE and C. E. WHITFIELD 1972 *Department of Transport Technology, Loughborough University of Technology, T.T.* 7202. Source mechanisms for rotor noise radiation.
104. G. I. TAYLOR 1924 *Nature* **113**, 536. The singing of wires in a wind. Reprinted in 1963 *Scientific Papers, Volume* III, 69 (Cambridge University Press).
105. M. KRAMER 1953 *Journal of the Aeronautical Sciences* **20**, 280–282 and 296. The aerodynamic profile as acoustic noise generator.
106. H. H. HUBBARD and D. J. MAGLIERI 1960 *Journal of the Acoustical Society of America* **32**, 1105–1107. Noise characteristics of helicopter rotors at tip speeds up to 900 feet per second.
107. M. J. T. SMITH and M. E. HOUSE 1967 *Journal of Engineering for Power: Transactions of the American Society of Mechanical Engineers (Series A)* **89**, 177–190. Internally generated noise from gas turbine engines: measurement and prediction.
108. R. SNOW 1970 *M.Sc. Dissertation, University of Southampton.* Correlation of broad band compressor noise.
109. C. L. MORFEY 1970 *International Symposium on the Fluid Mechanics and Design of Turbomachinery, Pennsylvania State University.* Broadband sound radiated from subsonic rotors.

110. R. MANI 1971 *Journal of Sound and Vibration* **17**, 251–260. Noise due to interaction of inlet turbulence with isolated stators and rotors.
111. C. W. HICKS and H. H. HUBBARD 1947 *NACA TN* 1354. Comparison of sound emission from two-blade, four-blade and seven-blade propellers.
112. N. LE S. FILLEUL 1966 *Journal of Sound and Vibration* **3**, 147–165. An investigation of axial *Technical Report* 62-73. A study of the origin and means of reducing helicopter noise.
113. R. G. SCHLEGEL, R. J. KING and H. R. MULL 1966 *U.S. Army Aviation Materiel Laboratories, AVLABS Technical Report* 66-4. Helicopter rotor noise generation and propagation.
114. R. G. LOEWY and L. R. SUTTON 1966 *Journal of Sound and Vibration* **4**, 305–344. A theory for predicting the rotational noise of lifting rotors in forward flight, including a comparison with experiment.
115. J. SCHEIMAN 1964 *NASA TM-X*-952. A tabulation of helicopter rotor-blade differential pressures, stresses, and motions, as measured in-flight.
116. M. V. LOWSON and J. B. OLLERHEAD 1969 *Journal of Sound and Vibration* **9**, 197–222. A theoretical study of helicopter rotor noise.
117. H. K. TANNA 1970 *Ph.D. Thesis, University of Southampton*. Sound radiation from sources in circular motion with application to helicopter rotor noise.
118. N. J. STAINER 1969 *M.Sc. Dissertation, University of Southampton*. An experimental investigation into rotational noise for a low solidity rotor.
119. B. BARRY and C. J. MOORE 1971 *Journal of Sound and Vibration* **17**, 207–220. Subsonic fan noise.
120. J. W. R. GRIFFITHS 1964 *Journal of Sound and Vibration* **1**, 127–140. The spectrum of compressor noise of a jet engine.
121. N. CHANDRASHEKHARA 1971 *Journal of Sound and Vibration* **18**, 533–543. Tone radiation from axial flow fans running in turbulent flow.
122. N. CHANDRASHEKHARA 1971 *Journal of Sound and Vibration* **19**, 133–146. Sound radiation from inflow turbulence in axial flow fans.
123. C. R. COX and R. R. LYNN 1962 *U.S. Army Transportation Research Command, TCREC Technical Report* 62–73. A study of the origin and means of reducing helicopter noise.
124. J. W. LEVERTON and F. W. TAYLOR 1966 *Journal of Sound and Vibration* **4**, 345–357. Helicopter blade slap.
125. J. W. LEVERTON 1971 *Aeronautical Journal of the Royal Aeronautical Society* **75**, 385–397. The sound of rotorcraft.
126. I. A. SIMONS, R. E. PACIFICO and J. P. JONES 1966 in *Proceedings of Cornell Aeronautical Laboratories/U.S. Army Aviation Materiel Laboratories Symposium, Volume* 1. The movement, structure, and breakdown of trailing vortices from a rotor blade.
127. B. W. MCCORMICK 1963 *The Boeing Company, Internal Note*. A study of the vortex system of the Vertol 107 II rotor.
128. I. A. SIMONS 1966 *Journal of Sound and Vibration* **4**, 268–281. Some aspects of blade/vortex interaction on helicopter rotors in forward flight.
129. A. R. WHATMORE 1969 *M.Sc. Dissertation, University of Southampton*. A study of transient noise from helicopter rotor blades.
130. C. B. AMOR and J. W. LEVERTON 1972 *American Helicopter Society Symposium on Status of Testing and Model Techniques for V/STOL Aircraft*. An investigation of impulsive rotor noise using a model rotor. Subsequently published in 1973 *Journal of Sound and Vibration* **28**, 55–71.
131. J. W. LEVERTON 1972 *NASA CR*-1983. Helicopter noise—blade slap. Part 2: Experimental results.
132. H. STERNFELD 1967 in *AGARD Conference Proceedings No.* 22, *Advisory Group for Aerospace Research and Development, NATO*. Influence of the tip vortex on helicopter rotor noise.
133. J. W. LEVERTON 1968 *NASA CR*-1221. Helicopter noise—blade slap. Part 1: Review and theoretical study.
134. H. SÖHNGEN 1941 *Jahrbuch* 1941 *der deutschen Luftfahrtforschung* I, 419–430. (In German.) Approximate calculation of the periodic blade loading on contra-rotating propellers.
135. J. S. B. MATHER, J. SAVIDGE and M. J. FISHER 1971 *Journal of Sound and Vibration* **16**, 407–418. New observations on tone generation in fans.
136. N. A. CUMPSTY 1972 *Journal of Sound and Vibration* **24**, 393–409. Tone noise from rotor/stator interactions in high speed fans.
137. R. PARKER 1970 in *Proceedings of the Institution of Mechanical Engineers (London)* **184**, *Part* 3 *G* (II), 1–8, 110–111 and 119. Relation between blade row spacing and potential flow interaction effects in turbo-machines.

138. S. LIEBLEIN and W. H. ROUDEBUSH 1956 *NACA TN* 3662. Theoretical loss relations for low-speed two-dimensional-cascade flow.
139. S. LIEBLEIN and W. H. ROUDEBUSH 1956 *NACA TN* 3771. Low-speed wake characteristics of two-dimensional cascade and isolated airfoil sections.
140. D. A. KILPATRICK and D. T. REID 1964 *Aeronautical Research Council (London), R. & M. No.* 3412. Transonic compressor noise: the effect of inlet guide vane/rotor spacing.
141. H. DAWSON and J. D. VOCE 1965 *Proceedings of the 5th International Congress on Acoustics, Liège, Volume 1b, paper L*14. The effect of axial spacing on compressor tone noise.
142. H. M. FINCHER 1966 *Journal of Sound and Vibration* **3**, 100–110. Fan noise—the effect of a single upstream stator.
143. A. D. DODSON 1969 *M.Sc. Dissertation, University of Southampton.* An investigation into rotor rotational noise of helicopters in the single and tandem rotor configuration.
144. R. HETHERINGTON 1963 *American Institute of Aeronautics and Astronautics Journal* **1**, 473–474. Compressor noise generated by fluctuating lift resulting from rotor–stator interaction.
145. C. L. MORFEY 1970 *Journal of Basic Engineering: Transactions of the American Society of Mechanical Engineers (Series D)* **92**, 450–458. Sound generation in subsonic turbomachinery.
146. I. R. PEIRCE 1972 *M.Sc. Dissertation, University of Southampton.* Rotor–stator interaction noise of ducted axial propulsion units for hovercraft.
147. S. KAJI and T. OKAZAKI 1970 *Journal of Sound and Vibration* **13**, 281–307. Generation of sound by rotor–stator interaction.
148. T. G. SOFRIN and G. F. PICKETT 1970 *International Symposium on the Fluid Mechanics and Design of Turbomachinery, Pennsylvania State University.* Multiple pure tone noise generated by fans at supersonic tip speeds.
149. R. AMIET 1971 *American Institute of Aeronautics and Astronautics Journal* **9**, 1893–1894. Transmission and reflection of sound by a blade row.
150. D. S. WHITEHEAD 1959 *Proceedings of the Institution of Mechanical Engineers (London)* **173**, 555–574. Vibration of cascade blades treated by actuator disc methods.
151. S. KAJI and T. OKAZAKI 1970 *Journal of Sound and Vibration* **11**, 339–353. Propagation of sound waves through a blade row: I. Analysis based on the semi-actuator disk theory.
152. R. MANI and G. HORVAY 1970 *Journal of Sound and Vibration* **12**, 59–83. Sound transmission through blade rows.
153. D. CHESTNUTT 1972 *M.Phil. Thesis, University of Southampton.* Transmission and reflection of sound by a blade row.
154. W. R. SEARS 1956 *Journal of the Aeronautical Sciences* **23**, 490–499. Some recent developments in airfoil theory.
155. A. I. VAN DE VOOREN 1958 in *Advances in Applied Mechanics, Volume* V, *Section* III. 4. Unsteady airfoil theory. New York: Academic Press.
156. W. F. HILTON 1938 *Proceedings of the Royal Society (London)* A **169**, 174–190. The photography of airscrew sound waves.
157. C. L. MORFEY 1969 in *Aerodynamic Noise* (Ed. H. S. Ribner), 299–329. A review of the sound-generating mechanisms in aircraft-engine fans and compressors. Toronto University Press.
158. C. L. MORFEY and M. J. FISHER 1970 *Aeronautical Journal of the Royal Aeronautical Society* **74**, 579–585. Shock-wave radiation from a supersonic ducted rotor.
159. T. G. SOFRIN and J. C. MCCANN 1966 *Paper presented at 72nd meeting of the Acoustical Society of America.* Pratt and Whitney Aircraft experience in compressor noise reduction.
160. M. G. PHILPOT 1971 *Journal of Engineering for Power: Transactions of the American Society of Mechanical Engineers (Series A)* **93**, 63–69. The buzz-saw noise generated by a high duty transonic compressor.
161. D. L. HAWKINGS 1971 *Journal of Sound and Vibration* **17**, 241–250. Multiple tone generation by transonic compressors.
162. M. KUROSAKA 1971 *Journal of Sound and Vibration* **19**, 453–462. A note on multiple pure tone noise.
163. G. F. PICKETT 1972 *Journal of Aircraft* **9**, 658–663. Prediction of the spectral content of combination tone noise.
164. C. J. MOORE 1972 *Journal of the Acoustical Society of America* **51**, 1471–1482. In-duct investigation of subsonic fan "rotor alone" noise.
165. P. D. YARDLEY 1973 *Ph.D. Thesis, University of Southampton.* The application of time-domain averaging techniques to fan noise measurement.
166. U. BOLLETER and R. C. CHANAUD 1971 *Journal of the Acoustical Society of America* **49**, 627–638. Propagation of fan noise in cylindrical ducts.

167. B. D. MUGRIDGE 1969 *Journal of Sound and Vibration* **10**, 227–246. The measurement of spinning acoustic modes generated in an axial flow fan.
168. U. BOLLETER and M. J. CROCKER 1972 *Journal of the Acoustical Society of America* **51**, 1439–1447. Theory and measurement of modal spectra in hard-walled cylindrical ducts.
169. P. HAREL and M. PERULLI 1972 *Journal of Sound and Vibration* **23**, 487–506. Measurement, in in a duct, of the space-structure of the discrete-frequency noise generated by an axial compressor.
170. H. E. PLUMBLEE and P. D. DEAN 1973 *Journal of Sound and Vibration* **28**, (in press). Sound measurements within and in the radiation field of an annular duct with flow.
171. C. H. ALLEN 1957 *Noise Control* **3**, 28–34. Noise from air-conditioning fans. See also 1960 *Noise Reduction* (Ed. L. L. Beranek), Ch. 21. New York: McGraw-Hill Book Co.
172. G. H. HÜBNER 1959 *Siemens Zeitschrift* **33**, 499–505. (In German.) Noise generation in radial fans.
173. G. H. HÜBNER 1963 *ASHRAE Journal* **5**, 87–94. Noise of centrifugal fans and rotating cylinders.
174. T. F. W. EMBLETON 1963 *Journal of the Acoustical Society of America* **35**, 700–705. Experimental study of noise reduction in centrifugal blowers.
175. G. C. GROFF 1964 *ASHRAE Transactions* **70**, 269–277. Centrifugal fan sound power testing.
176. K. W. YEOW 1969 *Ph.D. Thesis, University of Southampton*. Acoustic modelling of ducted centrifugal rotors. Submitted 1973 to *Journal of Sound and Vibration*.
177. L. CREMER 1971 *Journal of Sound and Vibration* **16**, 1–15. The Second Annual Fairey Lecture: The treatment of fans as black boxes.
178. J. H. G. HOWARD and E. LENNEMANN 1971 *Journal of Engineering for Power: Transactions of the American Society of Mechanical Engineers (Series A)* **93**, 126–132. Measured and predicted secondary flows in a centrifugal impeller.
179. U. ANDERS 1968 *DLR FB* 68-07, *DVL-Institut für Turbulenzforschung, Berlin*. Two-dimensional boundary layer measurements in a rotating system.
180. H. NAUMANN and H. YEH 1973 *Journal of Engineering for Power: Transactions of the American Society of Mechanical Engineers (Series A)* **95**, 1–10. Lift and pressure fluctuations of a cambered airfoil under periodic gusts and applications to turbomachinery.

APPENDIX—F. W. LANCHESTER†

Lanchester was a member of the Advisory Committee for Aeronautics from its formation in 1909 until 1920, when it was reorganized to become the Aeronautical Research Committee. He wrote two notes on propeller noise for the Committee which were never published: "Memorandum on the emission of sound by an aeroplane propeller" (T. 1058, December 1917) and "Note *re* the problem of the silent propeller" (T. 1159, May 1918).

The first note shows that Lanchester understood the mechanism of propeller radiation in physical terms, although he was not able to formulate it mathematically. He observed that

> "A sound wave may evidently be generated just as readily by a movement of a constant pressure difference in a circle or cyclic path as by a variable pressure difference at a stationary point, although the latter is the ordinary way of emitting sound. There is a certain analogy between the electro-magnetic radiation emitted by electrified particles moving in orbits and the acoustical radiation emitted by pressure centres moving in circles as in the propeller."

In the second note, he suggested that a combination of high propulsive thrust and low tip speed (and hence low noise) could be achieved by geared propellers operating at high advance ratios. The target proposed by Lanchester of a relative tip velocity only 1·4 times the velocity of flight is now commonplace with ducted fan engines!

† As well as marking the 10th anniversary of Southampton's Institute of Sound and Vibration Research, this review coincides with the 90th anniversary of Lanchester's arrival to study at Southampton. His first technical education was obtained at the Hartley Institution (later to become the University of Southampton) from 1883 to 1885.